Nuclear Engineering and Technology 50 (2018) 1088–1098

Contents lists available at ScienceDirect

Nuclear Engineering and Technology

journal homepage: www.elsevier.com/locate/net

Original Article

A study on characteristics and internal exposure evaluation of radioactive aerosols during pipe cutting in decommissioning of nuclear power plant

Sun Il Kim, Hak Yun Lee, Jong Soon Song*

Department of Nuclear Engineering, Chosun University, 309 Pilmun-daero, Dong-gu, Gwangju, 61452, Republic of Korea

ARTICLE INFO

Article history:
Received 10 November 2017
Received in revised form
31 January 2018
Accepted 11 June 2018
Available online 20 June 2018

Keywords:
Decommissioning
Radioactive aerosol
Pipe cutting internal exposure
HRTM

ABSTRACT

Kori unit #1, which is the first commercial nuclear power plant in Korea, was permanently shutdown in June 2017, and it is about to be decommissioned. Currently in Korea, researches on the decommissioning technology are actively conducted, but there are few researches on workers internal exposure to radioactive aerosol that is generated in the process of decommissioning nuclear power plants. As a result, the over-exposure of decommissioning workers is feared, and the optimal working time needs to be revised in consideration of radioactive aerosol. This study investigated the annual exposure limits of various countries, which can be used as an indicator in evaluating workers' internal exposure to radioactive aerosol during pipe cutting in the process of decommissioning nuclear power plants, and the growth and dynamics of aerosol. Also, to evaluate it, the authors compared/analyzed the cases of aerosol generated when activated pipes are cut in the process of nuclear power plants and the codes for evaluating internal exposure. The evaluation codes and analyzed data conform to ALARA, and they are believed to be used as an important indicator in deriving an optimal working time that does not excess the annual exposure limit.

1. Introduction

The radioactive aerosol, which is generated during pipe cutting in the process of decommissioning nuclear power plants, is inhaled by workers, and deposited in the respiratory system of the human body, and becomes a major factor causing internal exposure. Radioactive aerosol refers to the fine solid or liquid radionuclides floating in the fluid, and it is generated mostly when activated pipes are cut [1].

Once generated, the diameter of the radioactive aerosols increases from nm to μm due to the condensation of the supersaturated vapor and the collision between fine particles [2]. The radioactive aerosols, which grew to μm, are deposited in different parts of the respiratory system depending on particle size [3]. In general, if the size of the aerosol particle is greater than 10–15 μm, it is deposited in the mouth or nose, and if it is 5–10 μm, it tends to be deposited in the upper part of the bronchial tubes, and if it is 1~5 μm, it tends to be deposited in the alveoli. Also, as the radioactive aerosols deposited in the alveoli are absorbed into blood vessels due to the osmotic effect, and cause whole-body exposure [4], systematic management of decommissioning (cutting) workers' working is necessary. As the existing working time regulation does not consider the internal exposure due to the radioactive aerosols, generated during the decommissioning of nuclear power plants, however, the working time needs to be revised urgently.

The optimal working time that will prevent the over-exposure of decommissioning (cutting) workers, can be derived only if the particle shapes and distribution of radioactive aerosols are comprehensively investigated based on the characteristics of (AMAD, Radionuclide, Density) of aerosols, and the case studies of nuclear power plant decommissioning.

Accordingly, Chapter 3 of this paper conducted a comprehensive analysis by taking a theoretical approach to the generation and growth of aerosols, and the dynamic behavior, growth and generation mechanism of aerosols, obtained from the analysis, could present the predicted values for radioactive aerosol generation and behavior [5]. As predicted values are used in assessing the internal exposure dose of decommissioning workers, and they can derive

* Corresponding author.
E-mail addresses: jssong@chosun.ac.kr, kingdom17c@naver.com (J.S. Song).

https://doi.org/10.1016/j.net.2018.06.010

highly reliable values through comparison with actual measurement values, they are used as an important indicator.

To increase the accuracy of assessing the internal exposure dose of decommissioning workers, actual measurement values and predicted values are necessary [6]. A comparative analysis can be conducted with the predicted values, obtained above, and the actual measurement values, obtained from actual decommissioning cases, and Chapter 4 of this paper analyzed the representative decommissioning cases, i.e. Belgium's BR-3 and Japan's JPDR. Chapter 5 listed the internal exposure evaluation codes, and selected a code suitable for the direction of this research, and BiDAS, the selected internal exposure evaluation code, is believed to be suitable for use in deriving the optimal working time in consideration of the internal exposure of workers due to radioactive aerosols that will be generated in the decommissioning of nuclear power plants.

2. Annual dose limit regulations of different countries

To evaluate the internal exposure of decommissioning workers due to aerosols generated during cutting in the decommissioning of nuclear power plants, the annual permissible dose limits of various countries were analyzed proactively. Most annual permissible dose limits are based on the ICRP 60 recommendation, but in some countries, there are some differences. EU (European Union) stipulated the dose limit according to the recommendation of the basic safety standard guide (2013/59/Euratom) following ICRP 60, and EU member countries are in the process of changing the recommendation into a legislation bill by February 2018 [7,8]. The US stipulates the dose limit for workers as max 50 mSv a year based on the 'radiation protection standard' in the Code of Federal Regulations (10 CFR Part 20), but does not stipulate the 5-year effective dose limit [9]. Korea explicitly stipulates the 'standard for radiation protection, etc.' based on ICRP 60 [10], and Japan has the same does limit as Korea, but due to the Fukushima disaster, Japan's Ministry of Health, Labor and Welfare (MHLW) enacted an ordinance that temporarily increases the permissible dose to 250 mSv in an emergency [11].

Table 1 shows the dose limits for workers of different countries and agencies.

3. Analysis of radioactive aerosols

To evaluate the internal exposure of workers due to radioactive aerosols, a proactive understanding of the generation and growth mechanism and dynamic behavior of aerosols is necessary. This section approached the growth mechanism and dynamic behavior of aerosols as mathematical equations, and conducted a comprehensive analysis.

3.1. Generation and growth of aerosols

The growth of aerosol particles occurs mostly when particles collide with one another and agglomerate, and this is called agglomeration. Agglomeration occurs because particles have different velocities, and it is called different names depending on the causes of this difference in velocity. If two particles in irregular Brownian motion collide with each other, it is called Brownian agglomeration, and if two particles, which settle gravitationally at different velocities as they have different sizes, collide, it is called gravitational agglomeration, and if two particles collide with each other due to a turbulent eddy, it is called turbulent agglomeration [12,13].

In the three representative agglomeration mechanisms, i.e. gravitational agglomeration, turbulent agglomeration and Brownian agglomeration, function $\beta(u,v)$, which represents the probability of two particles of sizes u,vcoagulating is linearly proportional to the physical phenomenon that causes the collision between particles. Accordingly, coagulation kernel $\beta(u,v)$can be expressed as Eq. (1).

$$\beta(u,v) = \beta_B(u,v) + \beta_T(u,v) + \beta_T(u,v) \tag{1}$$

Here, the subscripts of β, i.e. B(Brownian), G(Gravity), T(Turbulent), are Brownian motion, gravity drop and turbulent motion respectively, and the function of each term can be expressed in greater detail as follows:

3.1.1. Brownian motion

The coagulation of particles due to the Brownian motion is caused by the irregular movement due to the collision of the media gas of particles, and related to the diffusion of aerosols. This function, which governs the coagulation of small particles in most cases, is expressed as Eq. (2).

$$\beta_B(u,v) = \frac{2kT}{3\mu}(r+r')\left[\frac{C_u(r')}{r'}\right]\frac{\gamma}{x} \tag{2}$$

Here $r,r'$are the radius of the parties whose mass is u,vrespectively. $\gamma$is the coagulation shape factor. It is a correction factor used when the size of the actual particle, which affects coagulation if it is not a globular particle, is different from that of the particle regarded as globular.

3.1.2. Gravity drop

The coagulation of particles due to gravity refers to the phenomenon in which two particles of different sizes collide with each other while falling and coagulate, and the terminal descending velocity of particles is faster for particles with a big mass, and in general bigger particles collide with small particles, and they coagulate. At this time, the probability of collision is proportional to the sum of the physical cross-sectional areas of the two particles and the difference in descending velocity. In this case, the effective cross-sectional area of the collision is smaller than the sum of actual cross-sectional areas due to the fluid dynamical reaction between the particles. To correct this, the collision efficiency factor is used. The gravitational coagulation kernel is expressed as follows:

$$\beta_G(u,v) = \frac{2\pi\rho_P g}{9\mu}\varepsilon(r,r')(r+r')^2\left|C_u(r)r^2 - C_u(r')r'^2\right|\frac{\gamma^2}{x} \tag{3}$$

Here, $\varepsilon(r,r')$ represents the collision efficiency factor.

Table 1
Radiation workers effective dose limit (mSv) recommended by major countries and institutions.

	Euratom	ICRP	IAEA	Germany	USA	JAPAN	KOREA	UK	FRANCE
5-year effective dose limit	100	100	100	100	–	100	100	100	100
Annual maximum effective dose limit	50 (20)	50 (20)	50 (20)	50 (20)	50 (20)	50 (20)	50 (20)	50 (20)	50 (20)

$$\varepsilon(r,r') = 0.5[r/(r+r')]^{0.666} \tag{4}$$

3.1.3. Turbulent motion

Turbulent coagulation can be subdivided based on the influence of two phenomena. The first is the phenomenon between particles of all sizes, and the second is inertial impaction, a phenomenon between particles of different sizes. The first term is expressed as

$$\beta_{T1}(u,v) = \varepsilon(r,r')(r+r')^2\left[\frac{8\pi\rho_g\varepsilon_T}{15\mu}\right]^{1/2}\gamma^3 \tag{5}$$

and the second term is expressed as

$$\beta_{T2}(u,v) = \varepsilon(r,r')(r+r')^2\left[\frac{4\rho_g\varepsilon_T^3}{15\mu}\right]^{1/2}\left|c_u(r)r^2 - C_u(r')r'^2\right|\frac{\gamma^2}{x} \tag{6}$$

Here, $\varepsilon_T$is the turbulent energy dissipation rate. Accordingly, the total turbulent coagulation rate is expressed as the sum of the above two terms.

$$\beta_T(u,v) = \beta_{T1}(u,v) + \beta_{T2}(u,v) \tag{7}$$

3.2. Dynamics of aerosols

The amount of radioactive aerosols, generation during the cutting process, does not linearly increase, but as time passes, the particles coagulate and the vapor on the surface of particles condenses, and thus the sizes of the particles grow, and the particles are deposited on the surface of the structure or at the bottom, and their quantity decreases, and as new particles are generated, their quantities increase. Also, the spatial distribution is changed by the flow of media gas and the difference of aerosols in concentration, and this complex change in aerosol particles is called dynamics [14].

The reaction of aerosol particles occur complexly at the same time, and the resulting change in aerosols is described by the Aerosol General Dynamic Equation. This equation is as follows:

$$\begin{aligned}\frac{\partial n(r,v,t)}{\partial t} &= \nabla^*[D(v)\nabla n(r,v,t)] - \nabla^*\left[U(v)n(r,v,t) - \nabla^*\left[C_u(r,v,t)\right]\right.\\ &+\frac{1}{2}\int_0^v \beta(v,v-u)n(r,v,t)n(r,v-u,t)du\\ &-n(r,v,t)\int_0^\infty \beta(u,v)n(r,v,t)du\\ &-\frac{\partial}{\partial v}[\phi(v,t)n(r,v,t)] + S(r,v,t)\end{aligned} \tag{8}$$

where

$n(r,v,t)dv$: particle Size Distribution Function. Particle number density whose size is between $v$and $v+dv$at time t and spatial coordinate r $(\#/cm^3)$
$D(v)$: brownian diffusion coefficient of the particle whose size is v.
$U(v)$: kinetic velocity of a particle whose size is v due to external force
c: kinetic velocity of the media gas
$\beta(u,v)$: a coefficient indicating the probability of particles whose size is u and v respectively coagulating due to the collision of two particles
$\phi(v,t)$: growth rate of a particle whose size is v due to vapor condensation
$S(r,v,t)$: generation rate of a particle whose size is v
$\frac{\partial n(r,v,t)}{\partial t}$: rate of change of a particle whose size is v

$\nabla^*[D(v)\nabla n(r,v,t)]$: diffusion

$\nabla^*[U(v)n(r,v,t)]$: motion due to external force
$\nabla^*[C_u(r,v,t)]$: rate of change of spatial distribution due to the motion of medium gas
$\int_0^v \beta(v,v-u)n(r,v,t)n(r,v-u,t)du$: generation rate of a particle whose size v due to the coagulation of small particles
$\int_0^\infty \beta(u,v)n(r,v,t)du$: reduction rate of a particle whose size is v due to coagulation
$-\frac{\partial}{\partial v}[\phi(v,t)n(r,v,t)]$: amount of reduction due to the condensation and growth of vapor on the surface of a particle whose size is v

3.3. Transfer simulation code of radioactive aerosols

To evaluate the internal exposure due to radioactive aerosols, the predicted values, which can be derived using the theoretical approach, and the actual measurement values of aerosols in actual decommissioning cases can be compared and the reliability can be assessed. Accordingly, this section analyzed the MELCOR code, which can simulate the deposition, transfer and behavior of aerosols, as the code for deriving predicted values.

3.3.1. MELCOR

The MELCOR code was developed by the Sandia National Laboratories for the purpose of analyzing the serious accidents of light water reactors like pressurized water reactors and boiling water reactors, and it is used by U.S.NRC (United States Nuclear Regulatory Commission) for verifying regulations. MELCOR includes 20 packages related to physical phenomena, such as COR, CVH, FL, HS, MP, SRR, DCH, RN and CAV, and each of them has a different function assigned to it [15]. The RN package of the MELCOR code includes the functions for evaluating source terms and simulating the transfer, deposition and behavior of aerosols, and if the RN input model is prepared and activated when the code is executed, the phenomenon and behavior related to source terms will be analyzed, and the result will be provided [16,17].

The RN Package simulates the behavior of fission products (aerosol or vapor type) and other nuclides, and it includes release from the nuclear fuel and debris bed, aerosol mechanics including vapor condensation and re-evaporation, deposition on the surface of the structure, transfer through the flow path, and removal using engineered safety features. This package is related to other packages (i.e., CVH for flow conditions, CRO/CAV for the temperature of the nuclear fuel/debris bed, HS for the temperature of the structure surface, and DCH for decay heat) for boundary conditions. Also, information related to rearrangement of the debris bed (COR/CAV), advection of nuclides between control volumes (CVH), and cleaning the nuclides with the water film on the structure surface (HS) is necessary.

The RN package uses 15 nuclide groups with similar chemical characteristics (same as the basic nuclide group of the RN package). As MELCOR assumes the basic nuclide in the nuclear fuel only as an

element, in order to handle compounds generated by the combination of elements during the release of the nuclear fuel, new nuclide groups need to be defined, and the maximum permissible number of defined nuclide groups is 20. Meanwhile, if it is linked to a model that uses different elements or nuclide groups (control rod materials, VANESA model), mapping will be used to define the nuclide group. The initial quantity of the nuclide group is defined by the DCH package, and the initial distribution in the reactor core and cavity is defined by the RN package.

The release of radionuclides occurs only in the nuclear fuel, the space between the nuclear fuel and the covering materials, and the debris bed in the cavity. The release in the core materials of the reactor core has 3 models (CORSOR, CORSOR-M, CORSOR-Booth). These release models refer to the release of radionuclides from nuclear fuel materials existing in the intact nuclear fuel, the resolidified nuclear fuel and the debris bed. The release of radionuclides due to CCI in the cavity is calculated by the VANESA model, and linked to the CORCON model that calculates thermal-hydraulic conditions.

The MAEROS model is used for the mechanical calculation of aerosol like the aerosol agglomeration or deposition process. (However, the vapor condensation and re-evaporation model in MAEROS is excluded) The MAEROS model uses mass classified by size according to the material type (component) of the aerosol. Accordingly, it is necessary to transfer the MAEROS component to the nuclide groups of the RN package. In consideration of efficiency, the 15 basic nuclide groups of the RN package are transferred to the single components of MAEROS. Aerosols are deposited according to such mechanisms as gravitational settling, diffusion to surface, thermophoresis (movement of particles towards the low temperature due to Brownian motion) and diffusiophoresis (movement on the surface of the structure due to vapor condensation). This deposition occurs on the surface of the structure and the water tank, and sometimes it moves to another control volume through the flow through. It is assumed that aerosols are agglomerated and if it becomes larger than the maximum diameter specified by the user, it will be deposited right away, and it is called fallout. Meanwhile, users can define it in the control volume that specified an aerosol source with an arbitrary generation rate over time.

Fission products and water are condensed in aerosols, on the surface of the structure surface or in the cooling water tank, or re-evaporated from them. Water, condensed in aerosols, is defined as fog in the CVH package. The quantity of this fog is determined by the thermal-hydraulic calculation in the CVH package, and distributed in different aerosol sections of the RN package according to the Mason equation. The water condensation/re-evaporation on the surface of the structure and in the cooling water tank is determined by the HS and CVH package. The condensation/re-evaporation of fission products is determined by the equation used in the TRAP-MELT2 code, and the reaction rate is determined in consideration of the size of the surface, the coefficient of mass transfer, concentration in the atmosphere, and saturation concentration.

Radionuclides are removed by pool scrubbing, filter trapping and spray scrubbing. As for the cooling water tank removal model, the SPARC90 code model was applied, and aerosol deposition due to the vapor condensation at the inlet of the cooling water tank, Brownian motion, gravity drop and inertial impaction is included. (Meanwhile, if the flow path of the atmospheric material is below the surface of the cooling water tank in the control, the bubble rise model switch (F:nnn02-IBUBF/IBUBT) of the FL package must be activated before the SPARC90 model of the RN package can be used for pool scrubbing calculation (see Fig. 1).

The normal flow path through the cooling water tank, the discharge flow path and the CCI reaction below the coolant are considered. The model of removal using a filter will be a simple model considering the filter in the flow path. A single filter will remove either aerosol or fission product vapor, and the efficiency of the filter will be determined by the decontamination factor entered by the user. The same decontamination factor will be provided for all RN nuclide groups by default. And the basic decontamination factor of water is 1.0. If the maximum loading of the filter is reached, desalinization will not be done anymore. The removal model based on sprinklers includes diffusiophoresis, inertial interception/impaction and Brownian motion, and removed fission products are deposited in the cooling water tank.

The chemistry of fission products includes adsorption, chemisorption and chemical reaction, and only the fission product vapor with the surface, and only the vapor and ion generated therefrom can go through chemical transformation in the cooling water tank [18].

The particle transfer code of aerosols, i.e. MELCOR, produces the result value through the interaction among several models as mentioned above. Several models for calculating the behavior of aerosols were developed. The MAEROS model is one of them. A widely used containment container analysis code, i.e. CONTAIN 2.0 [19], and the MAEROS [20] model, which is used as the aerosol behavior calculation module of a serious accident analysis code, i.e. MELCOR, use the Sectional Method [21] based on the finite difference method as the numerical model. However, the MAEROS model only analyzes the behavior due to the agglomeration, condensation and deposition of aerosols in a given control volume, and if the ambient gas (that is, carrier gas) goes in and out of the control volume, it will be excluded from the analysis. Accordingly, to analyze the aerosols in the reactor system of a complex reactor and inside the containment building, the aerosol transportation model between control volumes is necessary, and this model was implemented in GAMMA-FP using the aerosol transportation model [22,23].

4. Case of radioactive aerosol occur during pipe cutting

Around the world, the decommissioning of nuclear power plants was done in advanced nuclear countries, e.g. Vak kahl of Germany, Maine Yankee of the US, JPDR of Japan, and BR-3 of Belgium [24]. To analyze the characteristics of radioactive aerosols in each cutting process in these decommissioning cases, JPDR of Japan and BR-3 of Belgium were intensively analyzed.

4.1. Decommissioning case of JPDR

Japan Power Demonstration Reactor (JPDR) is a BWR-type experimental power generation system that began to produce electricity in 1963 in Japan [23]. JPDR was permanently shut down in 1976 for decommissioning, and the actual decommissioning began in 1986. Until the end of March 1991, the underwater plasma arc cutting and underwater arc saw cutting process was carried out, and the inside of the reactor and the reactor pressure vessel (RPV) were decommissioned. Table 2 shows the transfer ratio of aerosol particles in each cutting process.

The radioactive aerosol, generated in the process of cutting the 12-inch pipes with the reciprocating saw, was about 30 times bigger than the Plasma Torch. The distribution of the particles sizes of the aerosols, generated by the Plasma Torch, had a lower percentage of submicron aerosols than when the reciprocating saw, and the distribution was a bimodal distribution. Movement ratio ranged between 10^{-2}% and 10^{-3}% for the Underwater Plasma Arc Cutting inside the reactor and the Underwater Arc Saw Cutting of RPV [25].

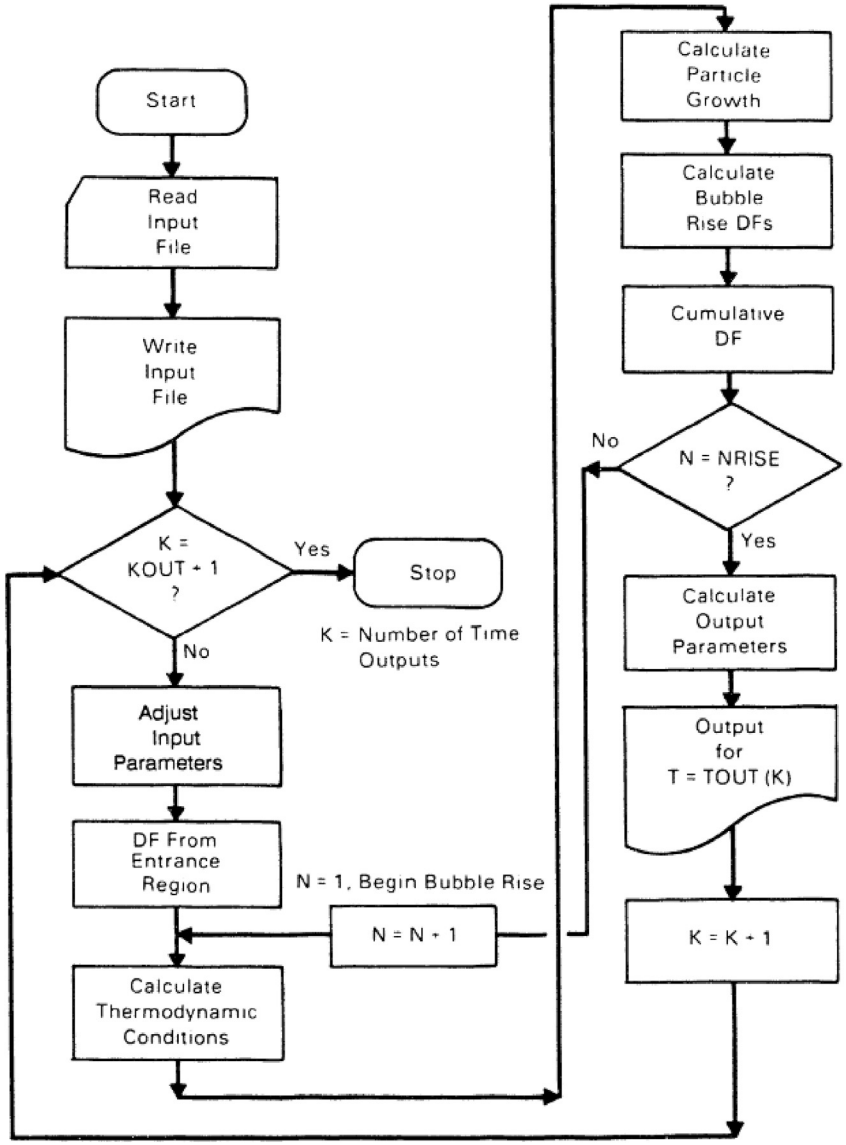

Fig. 1. Flow chart of the SPARC90 code.

Table 2
Transfer rates of aerosol particles due to the cutting and segmentation of stainless steel pipes by cutting process.

Cutting tool	Pipe size (inch)	Radioactivity immigration ratio (%)		Mass immigration ratio (%)	
		Range	Mean	Range	Mean
Band saw	2	5.8–37	13	–	$< 10^{-2}$
Band saw	6	10–58	19	–	$<10^{-2}$
Reciprocating saw	12	7.0–24	9.9	–	$<10^{-2}$
Plasma torch	12	0.23–0.78	0.44	0.53–0.82	0.66

4.2. Decommissioning case of BR-3

BR-3 is the first reactor designed and installed by Westinghouse in 1964, and the inside was replaced for the purpose of experimentation, and it was named 'Vulcain'. This process includes the decommissioning of the thermal-barrier tube, the old reactor and the experimental reactor [26].

For the decommissioning of the thermal-barrier tube, the plasma arc torch, electric discharge machining (EDM), and 3 milling technologies were selected. Comparison items include the amount of secondary waste (aerosol) generated, the cutting period and the exposure of workers. Table 3 shows the comparison of the results of the cutting of the thermal-barrier tube using the 3 selected cutting technologies.

Fig. 2 illustrates that the mechanical cutting method generated less secondary waste considering the fact that the plasma arc cutting working time was double, and only carbon filters were used for filtration, but when the EDM cutting method was used, activated materials were filtered.

After plasma cutting, carbon was detected in the middle and last filter. The ion exchanger had the same problem. As for workers' exposure, it was found that when the EDM method was used in the activated zone for a long time at a low cutting speed, the exposure level was very high. As a result, the mechanical cutting method was selected for the decommissioning, and the following advantages were identified [27,28].

Table 3
Results of cutting thermal-barrier tubes by process.

Item	Cutting speed (mm/min)		Optimal average cutting speed (mm/min)		Exposure	Secondary waste
Cutting method	Absolute value	Relative comparison	Absolute value	Relative comparison	Simple comparison value	Simple comparison value
EDM	0.6	0.1	0.28	0.25	−3	−5
Mach.	6	1	1.13	1	1	1
Plasma	300	50	1.83	1.6	−1	−5

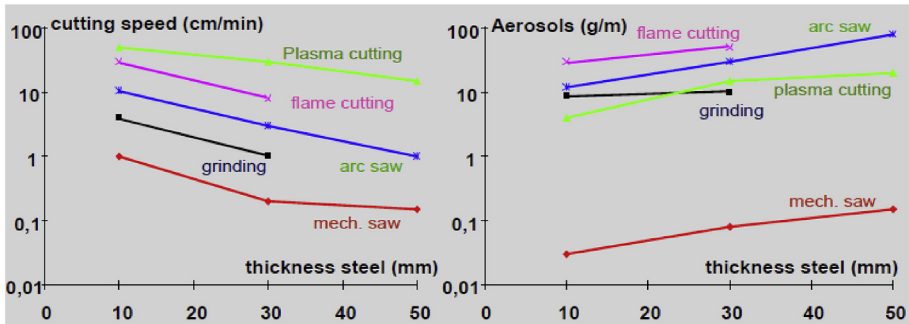

Fig. 2. Characteristics of aerosols generated in different cutting processes.

- It is the best known general technology. Only simple additional measures are necessary for underwater work
- It is easy to filter out secondary waste using a filtration system with simple fillers.
- When the object is thin, only a small quantity of waste is generated.
- There is no radioactive smoke, gas or ions to decompose.
- It takes about the same time as other cutting methods.

5. Body absorption behavior of radioactive aerosol

Radioactive aerosols, which penetrated the body due to workers' inhalation, differ from one another in fractions deposited in organs depending on particle sizes. To establish the standards for the deposited fractions, International Commission on Radiological Protection (ICRP) proposed HRTM (Human Respiratory Tract Model) at ICRP 66, which is a model applied to calculate the dose coefficient and bioassay function of workers and ordinary citizens (see Fig. 3).

The classified particle sizes according to the worker and the public are shown in the ICRP-66 HRTM and it is recommended that 5 μm (AMAD) in case of the worker and 1 μm (AMAD) in case of the adult men of the public according to the HRTM.

In addition, HRTM provides the void ratio of particle transfer in each section, and can apply reliable numbers to the extrathoracic (ET), bronchial tube (BB), bronchiole (bb) and artificial respiratory system area [29].

The key functions of ICRP-66 HRTM are described below:

- Qualitative and quantitative description of the respiratory system as the path for radionuclides until they penetrate the body
- How to calculate the radiation dose of the respiratory organ due to random exposure
- How to calculate the transfer of radionuclides to other tissues

Also, ICRP-66 HRTM can be applied in the following situations:

- Evaluation of doses due to exposure, and evaluation of intake due to biological analysis and measurement
- radionuclides included in particles (aerosols) of all sizes (0.0006–100 μm), gas and vapor
- providing reference guides in consideration of the influence of smoking, diseases and pollutants on different gages of the human body (3 months, children age 1,5,10 and 15 and adults).

Table 4 summarizes the deposition area by particle size when aerosol particles floating in the air is inhaled, and Fig. 4 illustrates the flow of aerosol particles inside the human body as presented by HRTM.

0.05% of the substances deposited in the ET_2 area remains on the wall (ET_{seq}), and the rest remains in section ET_2, and it is assumed to quickly escape through the gastro-intestinal tract. The fraction of sediments that are slowly removed from BB an bb(BB_2 and bb_2) is 50% if the physical size of the particle is < 2.5 μm, and it decreases if the diameter is > 2.5 μm, and the fraction remaining on the walls of the respiratory tract (BB_{seq} and bb_{seq}) is 0.7% in all sizes. AI deposits are divided among AI_1, AI_2 and AI_3 at the 0.3: 0.6: 0.1 ratio [30].

5.1. Evaluation code of internal exposure by radioactive aerosol

The representative codes that can evaluate internal exposure due to radioactive aerosols are IMIE, LUDEP, IMBA and BiDAS. The basic dose database of most internal exposure evaluation codes uses the ICRP Tract Model, but it differs from code to code not only at the particle size suggested by ICRP, i.e. 5 μm, but also at all applicable particle sizes. This section compared the tract models applied to different aerosol particle sizes that can be calculated in internal exposure evaluation codes, and different organs, and Table 5 summarizes them.

5.1.1. IMIE (individual monitoring of the internal exposure)

The IMIE code was developed for retrospective dosimetry. Its main purpose is to reconstruct multiple intake with regard to the foundation of body measuring devices or bioassay data and known exposure conditions like exposure date, intake path, AMAD and material type (inhalation case). In case of unknown or non-standard exposure conditions, it can compare a wide range of exposure scenarios like intake date, intake path (inhalation, intake,

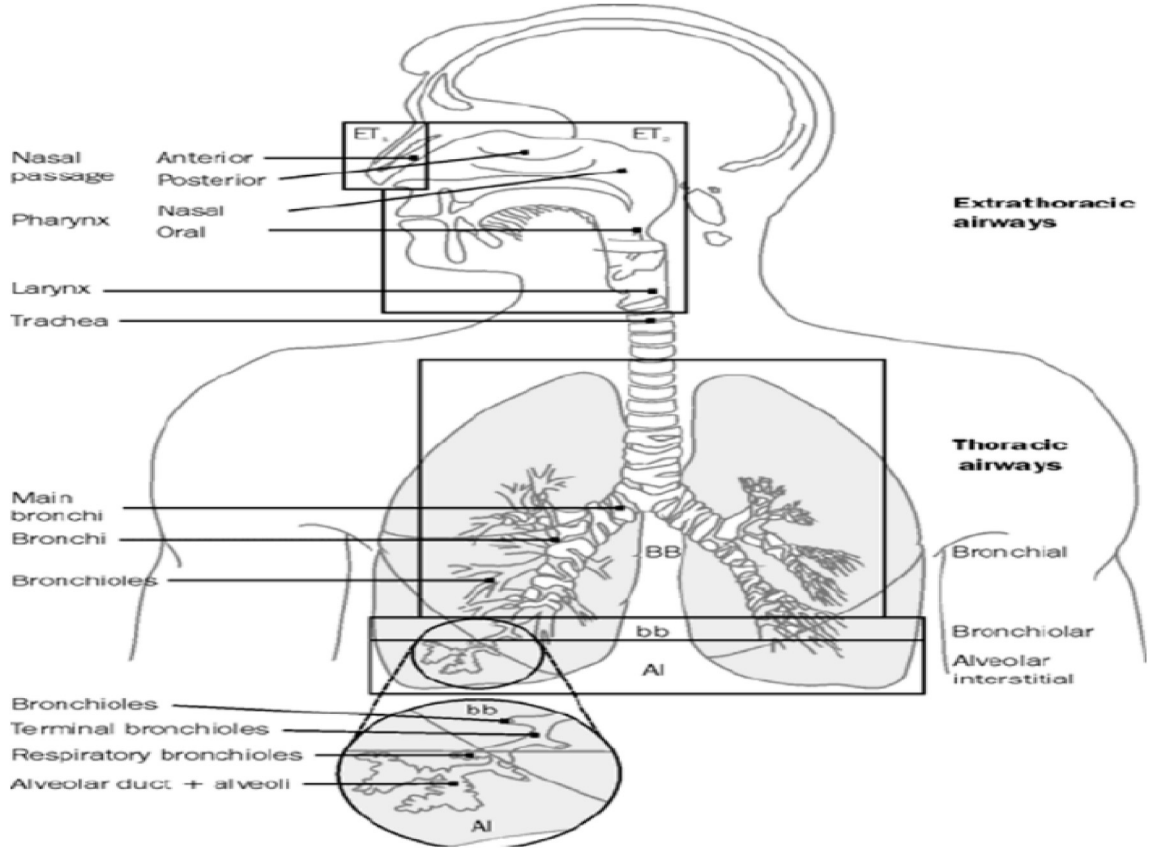

Fig. 3. Human respiratory tract model.

Table 4
Deposition regions by particle size.

Compartment	Particle size
Nose or mouth	5.8–9.0 μm
Pharynx	4.7–5.8 μm
Trachea & Primary bronchus	3.3–4.7 μm
Secondary bronchus	2.1–3.3 μm
Terminal bronchus	1.1–2.1 μm
Alveolar duct	0.6–1.1 μm
Alveolus	0.43–0.65 μm

etc.), AMAD and inhaled aerosol particles. IMIE analyzes all parameter combinations in the selected range and finds analyzed measurement values, and it can analyze several data sets (feces and urine) and 'direct dose evaluation' for selected radionuclides at the same time. A total of 46 nuclides (Table 5) can be calculated, and it can predict and measure the behavior and influence of the nuclides, which penetrated the human body through inhalation (aerosol, gas and vapor), intake, injection, injury and intake path, on the urine, feces, lung, thyroid and whole body. Also, it can calculated a wide range of particle sizes from 0.001 to 20 μm. Table 6 shows the basic functions of IMIE [31,32].

5.1.2. LUDEP (A lung dose evaluation program)

The LUDEP code is a software package developed by the National Radiological Protection Board of the UK to calculate internal dose using the new ICRP Respiratory Tract Model (ICRP Publication 66). The downgrade versions of the IMBA code are ICRP-66 HRTM, ICRP-30 GI tube model, NCRP injury model and ICRP-78 bio dynamic model.

LUDEP was verified in the following two stages based on the ICRP methodology, which was used for internal dose evaluation.

- To estimate the radionuclide intake from the measured work results, the m(t) value, calculated by LUDEP and the table data of ICRP-78 (or ICRP-54) were compared.
- The data based on the IAEA basic safety standard, and the inhalation and intake dose factors, calculated by LUDEP, $e(g)_{inh,j}$ and $e(g)_{inh,i}$, were compared.

The major parameters applied to calculation according to aforementioned ICRP and IBSS publications are as follows:

- AMAD = 5μm, M-type substance (can be changed to what is most suitable for the radionuclide).
- The f_1 value given with regard to an unspecified compound or the most limited value for intake.

The radionuclide for calculation was selected on the recent practices of the IAEA laboratory. It was found that LUDEP can be used only for a limited number of radionuclides, and it was confirmed that intake can be estimated based on the calculated maintenance and excretion curve [33,34].

5.1.3. IMBA (integrated modules for bioassay analysis)

The IMBA code is a program jointly developed by ACJ & Associates and HPA, and it can evaluate intake based on the biological measurement data, calculate biological analytical quantity at another time after intake, and calculate the equivalent organ dose and effective dose from single intake. The ICRP–66/30 gastrointestinal tract model, the NCRP injury model and the ICRP-78

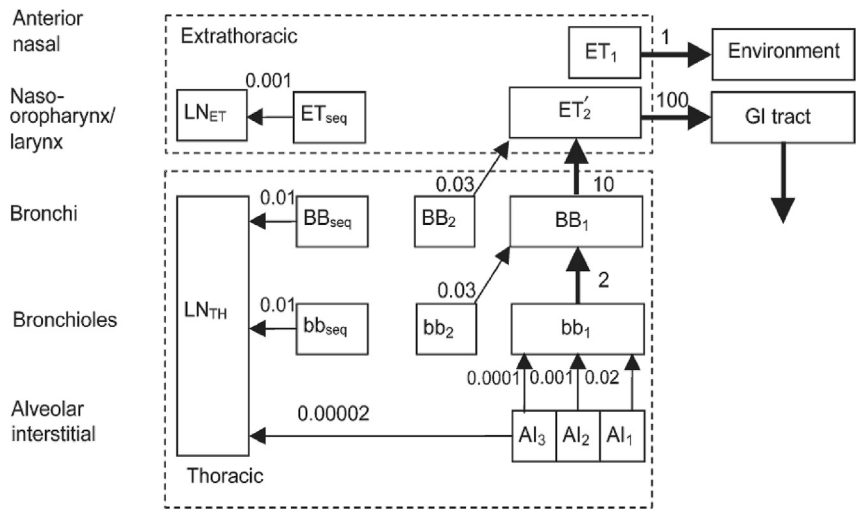

Fig. 4. Compartment model representing time-dependent particle transport from each respiratory tract region in the HRTM.

Table 5
Outline of internal exposure evaluation codes.

Internal exposure evaluation code	ICRP model applied to the respiratory system	Calculable particle sizes	Number of considered nuclides	Absorption type
IMIE	ICRP-66 HRTM	0.001 ~ 20μm	28 elements 46 radionuclides	F, M, S
LUDEP	ICRP-66 HRTM	5μm (can be changed arbitrarily)	497 radionuclides	F, M, S
IMBA	ICRP-66 HRTM	5μm (can be changed arbitrarily)	IMBA libraryb (can be added arbitrarily)	F, M, S
BiDAS	ICRP-66 HRTM	0.01 ~ 10μm	30. including the nuclide proposed in ICRP 78	F, M, S

Table 6
Composition of the basic functions of IMIE.

Radionuclide (28 elements, 46 radionuclides)	^{3}H, ^{32}P, ^{33}P, ^{35}S, ^{51}Cr, ^{54}Mn, ^{59}Fe, ^{58}Co, ^{60}Co, ^{65}Zn, ^{89}Sr, ^{90}Sr, ^{95}Zr, ^{95}Nb, ^{99}Tc, ^{99m}Tc, ^{103}Ru, ^{106}Ru, ^{110m}Ag, ^{132}Te, ^{123}I, ^{125}I, ^{131}I, ^{132}I, ^{134}Cs, ^{137}Cs, ^{140}Ba, ^{141}Ce, ^{144}Ce, ^{201}Tl, ^{202}Tl, ^{210}Pb, ^{210}Po, ^{226}Ra, ^{228}Th, ^{232}Th, ^{234}U, ^{235}U, ^{238}U, ^{237}Np, ^{238}Pu, ^{239}Pu, ^{240}Pu, ^{241}Pu, ^{241}Am, ^{243}Am
Measurements	Urine, Feces, Lung, Thyroid and Whole Body
Route of intake	Inhalation (aerosols, gases and vapours), Ingestion, Injection, Wound, Arbitrary mixture of intake routs
Type of Material	F, M, S, Arbitrary mixture of Types
AMAD	0.001–20μm, polymodal distribution represented by superposition of lognormal distributions (“Mixture of AMADs”)
Intake pattern	One or several intakes (acute or chronic)
Mode of analysis	- Full automatic modes: ICRP-78, Smart - Interactive modes: Semi-Automated - Special Accident mode (Modification of the Manual mode useful for analysis of accident cases) - Simultaneous analysis of several data sets from different data sources
Dose (intake) calculation Best estimate	- weighted least-squares fit; - unweighted least-squares fit
Data Output	- Pattern of the reconstructed intake(s) (Data and amplitude) - Assessed Type of Materials and AMAD (for each reconstructed intake) - Committed effective dose associated with each reconstructed intake - Annual doses - Total committed effective dose

biometrics model are used. The respiratory system model, the digestive organ model and the metabolic model evaluates the exposure of the ICRP-68 standard worker, which is the recommended model. The calculable particle size is 5 μm, the size recommended by ICRP, but it can be changed arbitrarily.

IMBA calculated the calculated value of the equivalent organ dose and committed effective dose due to acute and unit inhalation and intake with regard to each radionuclide during the code development process, and the bioassay quantity due to acute and unit inhalation and intake with regard to one or more radionuclides per element, and compared them with the calculated value of PLEIADES, one of the internal dosimetry codes [35,36]. Less than 1% difference between the PLEIADES result value and the IMBA result value was an acceptable error, but in certain situations, the difference was greater than 1% (in case PLEIADES uses independent dynamics, and IMBA uses official dynamics) [37,38].

5.1.4. BiDAS (bioassay data analysis software)

BiDAS was is a radiation worker internal exposure dose assessment computer code, developed by KAERI (Korea Atomic Energy Research Institute) in 2003, and in 2007 it was upgraded to BiDAS-2009 which improved functionality, reliability and convenience of the code. The metabolic models of the radionuclide are the ICRP-66 respiratory system model, the ICRP-30 digestive system model, and

the ICRP-30, 56, 67, 69, and 71 biokinetic model [39,40].

The BiDAS code consist of the intake residue and daily excretion rate data module, the dose coefficient data module, the measurement data statistical processing module, the personal data management module and the graphic processing module.

Fig. 5 illustrates the module block diagram of the BiDAS code.

The intake residue and daily excretion rate data module is a model that contains the intake residue of single acute intake (a value corresponding to the whole body and other organs) and the daily excretion rate (value corresponding to the urine and feces). This data is divided into inhalation intake and oral intake according to the intake pathway. Inhalation intake is divided again depending on particle sizes (0.01, 0.03, 0.1, 0.3, 1, 3, 5, 10 μm) and the absorption type of the compound (Type F, M and S), and oral intake is again divided according to the digestive system absorption ratio (f_1). In this data, the time elapsed after intake increases by 0.1 day from 0.1 day, and the maximum value is 3650 days. The data on continuous intake is not embedded, but this value is calculated according to the calculation algorithm of this code.

The dose coefficient data module is a module that contains the dose coefficient obtained using the ICRP CD-ROM. The embedded data is divided according to the intake pathway and the physical and chemical characteristics of particles like the intake residue and daily excretion rate.

The statistical processing model of measurement data is an intake calculation module. The intake evaluation mode in the BiDAS code consists of the ICRP 78 mode, the interactive mode, the automatic mode and the manual mode. The ICRP-78 mode is used only for acute single intake, and all the other modes are used for acute and continuous intake.

The personal data management module is a module used for input, modification and deletion of personal information and the graphic processing module is a module that processes the display of calculation results when intake and committed effective dose are calculated, and the intake residue and daily excretion rate [41].

This study selected BiDAS among internal exposure evaluation codes listed above as a code capable of calculating fine particles and based on the regulatory standards and laws of Korea, and analyzed the composition of BiDAS and the mathematical equation for internal exposure dose evaluation that is applied.

5.2. BiDAS internal exposure evaluation equation

The internal exposure dose due to radionuclide intake can be evaluated by multiplying radionuclide intake (Bq) by the committed effective dose conversion factor e_{50}(Sv/Bq), calculated according to the typical body conditions and biological behavior model. That is, the committed effective dose E_{50} due to ingested radionuclide can be obtained as shown in Eq. (9) by multiplying radionuclide intake I and the committed effective dose conversion factor e_{50} due to unit intake.

$$E_{50} = I^{*}e_{50} \tag{9}$$

In the above equation, radionuclide intake I can be obtained as shown in Eq. (10) or Equation (11) by dividing the residual radioactivity $M_T(t)$ in tissue T or the radioactivity in daily excreta X $M_X(t)$ at the time elapsed after intake t by the daily radioactive excreta fraction through excreta X $m_X(t)$ respectively.

$$I = \frac{M_T(t)}{m_T(t)} \tag{10}$$

$$I = \frac{M_X(t)}{m_X(t)} \tag{11}$$

The retention fraction and daily excreta fraction of ingested radionuclides vary depending on not only the bioassay measurement targets, e.g. the whole body, lung, thyroid, urine and feces, but also internal exposure radiation dose evaluation factors like the radionuclide intake pathway (breathing and eating), compound types, body fluid absorption types in the lung (Type F, M, S), the body fluid absorption ration in the digestive system (f_1), radioactive particle sizes (AMAD: Activity Median Aerodynamic Diameter), and the time elapsed after intake. Therefore, even if the bioassay measurement values, which are the radioactivity measurement values in the body or excreta, are the same, depending on the application conditions of dose evaluation factors, radionuclide intake will be evaluated differently. Also, as the committed effective dose conversion factors per unit radioactivity intake vary depending on the radionuclide intake pathway, absorption type, coefficient of digestibility and AMAD, even if intake is the same, the committed effective dose is evaluated differently depending on dose evaluation factors. Like this, the evaluation results of the radionuclide intake and committed effective dose are affected by several internal exposure radiation dose evaluation factors.

Accordingly, the radionuclide intake and committed effective dose can be obtained using Eq. (12) or Eq. (13) depending on several dose evaluation factors.

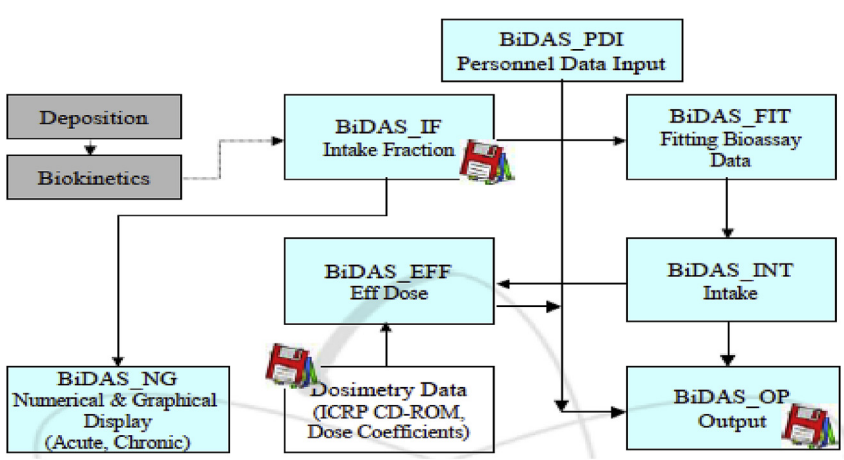

Fig. 5. Composition of the BiDAS code.

$$I^{p,a,f,d} = \frac{M_B(t)}{m_B^{p,a,f,d}(t)} \tag{12}$$

$$E_{50}^{p,a,f,d} = I^{p,a,f,d} * e_{50}^{p,a,f,d} \tag{13}$$

where

$M_B(t)$: the radioactivity measurement value in bioassay measurement target B at time elapsed after radionuclide intake t(residual radioactivity in the body or daily excretion radioactivity) measurement values.
p: intake pathway
a: absorption type in the lung
f: coefficient of digestibility (f_1 value: fractional uptake of an element from the gastrointestinal tract)
d: AMAD (Activity Median Aerodynamic Diameter)
$m_B^{p,a,f,d}(t)$: retention fraction or daily excreta fraction at time elapsed t after intake of radionuclide, which has dose evaluation factors p,a,f,din measurement target B
$I^{p,a,f,d}$: radionuclide intake with dose evaluation factors p,a,f,d
$e_{50}^{p,a,f,d}$: the committed effective dose conversion factor (Sv/Bq) of radionuclides which have dose evaluation factors p,a,f,d– 50-year effective dose per intake of unit radioactivity (Bq)
$E_{50}^{p,a,f,d}$: 50-year committed effective dose (Sv) due to radionuclide intake

Fig. 6 illustrates the flow chart for evaluating the radionuclide intake and committed effective dose [44].

6. Conclusion

Radioactive aerosols, generated in the process of cutting the popes activated during the decommissioning of nuclear power plants, are deposited in the respiratory system due to workers' inhalation, and become a major cause of internal exposure. Deposited radioactive aerosols have various sizes, and in particular, as the 1 ~ 5μm radioactive aerosols deposited in the alveoli are absorbed in blood, they cause whole-body exposure. Therefore, they need to be systematically managed. The existing working time regulation does not consider the internal exposure due to radioactive aerosols generated during the decommissioning of nuclear power plants, however, it is urgently needed to revise working time in consideration of this. The optimal working time for preventing the over-exposure of decommissioning (cutting) workers can be derived only after the characteristics of aerosols (AMAD, Radionuclide, Density) and the particle shapes and distribution of radioactive aerosols based on cases of nuclear power plant decommissioning are comprehensively investigated.

Accordingly, this study analyzed the growth of aerosols, the mathematical theory of dynamics, and MELCOR, the transfer computer code based on this to understand the generation and behavior mechanism of the radioactive aerosols. Also, the particle size distribution of radioactive aerosols, generated when the plasma arc torch, one of the cutting processes during the actual decommissioning of nuclear power plants, is applied, was obtained, and the following results were derived.

When aluminum was cut using the plasma arc torch in nuclear facilities, 85% of the radioactive aerosol mass distribution had a particle size smaller than 1μm, and MMAD (Mass Median Aerodynamic Diameter) was 0.48 ± 0.71 μm, and when carbon steel was cut, the mass distribution had extreme particle sizes, i.e. 9.8 μm or greater, and 0.3 μm 3 μm or smaller, and average MMAD was, 0.52 ± 0.12 μm. In case of stainless steel, which was similar to aluminum in mass distribution, MMAD was 0.36 ± 0.09 μm [45].

The MMAD aforementioned in the paragraph is required to be transferred to AMAD which is on the basis of the radioactivity from mass median diameter regarding aerodynamics. A method for transferring MMAD to AMAD is Hatch-Choate Equation as Eq. (14).

$$(AMAD) = (MMAD)_{\exp}\left(-0.955 \times \ln^2 \sigma_g\right) \tag{14}$$

where

σ_g: Geometric standard deviation

Based on these results, it was found that the sizes of radioactive aerosols, generated during decommissioning, existed in very small sizes in the second decimal place when only 10μm or smaller actually inhaled by workers were considered. Given the sizes of aerosol particles in various ranges, among the internal exposure evaluation codes, BiDAS whose calculable particle sizes range between 0.01μm and 10μm is the most suita0ble for evaluating internal exposure. Also, as the reliability test through IMIE and IMBA, it showed an error smaller than 1%, it is believed to be excellent in accuracy as well [42,43]. If BiDAS is used to evaluate internal exposure of decommissioning workers, and the dose database is

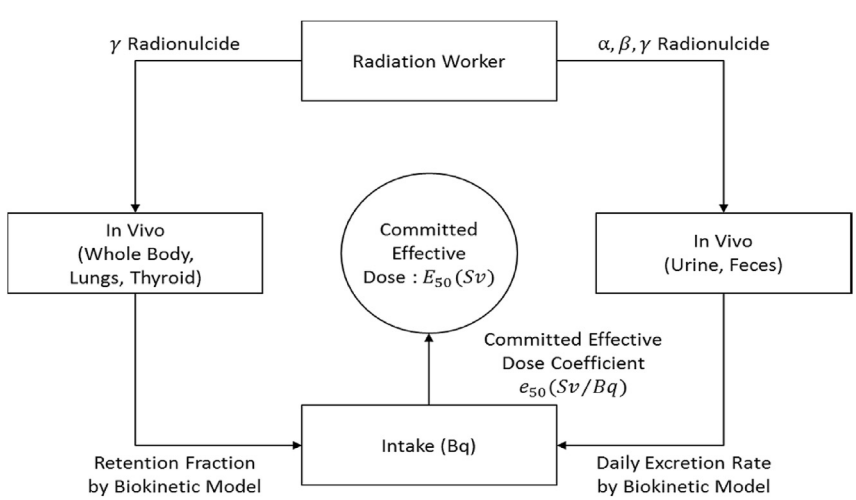

Fig. 6. Internal exposure dose assessment flow chart.

implemented in the future, it will be used as an important indicator in deriving the optimal working time for preventing the overexposure of workers during the decommissioning of nuclear power plants decommissioning.

Acknowledgments

This work was supported by a Nuclear Technology & Development Program of the National Research Foundation of Korea (NRF) grant funded by the Ministry of Science and ICT (MSIT) (Grant No. NRF-2017M2A8A4018598)

References

[1] M.Y. Kim, S.H. Park, Characteristics of radioactive aerosol particles in nuclear power plant containments, Particle Aerosol Res. (2014).
[2] H.-J. Allelein, et al., State of the Art Report on Nuclear Aerosols, Organization for Economic Cooperation and development of Nuclear Energy Agency, Committee on the safety of nuclear installations, NEA/CSNI, 2009.
[3] P. Worth Longest, Landon T. Holbrook, In silico models aerosol delivery to the respiratory tract – development and applications, Adv. Drug Deliv. Rev. (2011) 16. ADR-12134.
[4] Pascal Demoly, Paul Hagedoorn, Anne H. de Boer, Henderik W. Frijlink, The clinical relevance of dry powder inhaler performance for drug delivery, Respir. Med. 108 (2014) 1195–1203, 2014.
[5] J.W. Eom, B. Lee, Analytical methods for atmospheric particulate aerosols: focused on the physical properties and chemical composition of metals and water soluble ionic compounds, Analytical Sci. Technol. 28 (3) (2015) 139–159.
[6] OECD/NEA, R&D and Innovation Needs for Decommissioning Nuclear Facilities, OECD/NEA, Paris, 2014.
[7] Stefan Mundigl, The New Euratom Basic Safety Standard Directive, European Commission – Directorate General for Energy – Directorate Nuclear Safety and Fuel Cycle – Radiation Protection Unit, 2014.
[8] Vienna, Summary of the European Directive 2013/59/Euratom: Essentials for Health Professionals in Radiology, European Society of Radiology(ESR), 2015.
[9] U.S.NRC, Subpart C—occupational Dose Limits, 1991, 56 FR 23396.
[10] NSSC, Nuclear Safety Commission Notice No. 2011-29, 2011.
[11] Ministry of Health, Labour and Welfare, Opinions on the Draft Ministerial Ordinance to Revise Part of the Ordinance on Prevention of Ionizing Radiation Hazards, 2015.
[12] Chaim Gutfinger, S.K. Friedlander, Enhanced Deposition of Suspended Particles to Fibrous Surfaces from Turbulent Gas Streams, Aerosol Science and Technology, 2007. ISSN:0278–6826.
[13] K.T. Kim, J.Y. Choi, "Fine particle Removal Technology", Department of Mechanical Engineering – Environmental Particle Control Laboratory, KAIST.
[14] J.W. Park, A Study on Numerical Modeling of Aerosol Behavior Dynamics for Nuclear Reactor Safety Studies, KiSTi, 1993. KOSEF903-1210-001-2.
[15] S.H. Park, D.H. Kim, K.R. Kim, A Restructuring of RN1 Package for MIDAS Computer Code, 2003. KNS 2003-Autumn.
[16] S.J. Han, T.W. Kim, K.I. Ahn, An approach to estimation of radiological source term for a severe nuclear accident using MELCOR code, KAERI, J. Soc. Safety 27 (6) (2012) 192–204.
[17] S.H. Park, K.I. Ahn, D.H. Kim, H.D. Kim, A restructuring of the MELCOR code to establish the MIDAS computer code, J. Korea Info. Scie. Soc. 10 (12) (2012) 151–158.
[18] KAERI, MELCOR Code Modeling for APR1400, 2001. KAERI/TR-1847/2001.
[19] K.K. Murata, et al., Code Manual for CONTAIN 2.0:A Computer Code for Nuclear Reactor Containment Analysis, Sandia National Laboratory, 1997. NUREG/CR-6533, SAND97–1735.
[20] Larry Humphries, MELCOR RN Package Aerosol and Vapor Physics, Sandia National Laboratories, 2015.
[21] F. Gelbard, J.H. Seinfeld, Simulation of multicomponent aerosol dynamic, J. Colloid Interface Sci. 78 (2) (1980).
[22] C. Yoon, G.S. Ha, H.S. Lim, Development and validation of the aerosol inertial deposition model for analyzing fission product behavior in NPPs, J. Mech. Sci. Technol. (2013) 4143–4148. ISSN : 1738-494X.
[23] C. Yoon, H.S. Lim, Development of analytic computer software for the aerosol fission products behavior in VHTR's, in: 2013 KSME Meeting of Micro/Nano Engineering Division, 2013.
[24] Korea Atomic Industrial Forum, The 20th Nuclear Industry Survey Report, 2014.
[25] J. Onodera, C. Nakakmura, H. Yabuta, Y. Yokosuka, T. Nisizono, Y. Ikezawa, "Radiation Control Experience during JPDR Decommissioning", Japan Atomic Energy Research Institute.
[26] J. Dadoumont, V. Massaut, M. Klein, Y. Demeulemeester, "Decommissioning of a Small Reactor (BR3 Reactor, Belgium)", SCK-CEN, XA0201612.
[27] KAERI, A State-of-the Art on the Dismantling Techniques for the KRR-1 & 2 Decommissioning, 2001. KAERI/AR-609/2001.
[28] Lawrence E. Boing, "Dismantlement Technologies", Argonne National Laboratory Decommissioning Program.
[29] A draft document by a Task Group of Committee 2 of The International Commission on Radiological Protection, Human Alimentary Tract Model for Radiological Protection, 2004, 22/263/04.
[30] M.R. Bailey, E. Ansoborlo, R.A. Guilmette, F. Paquet, Updating the icrp human respiratory tract model, Radiat. Protect. Dosim. 127 (1–4) (2008) 31–34.
[31] IDEAS Report Summary, "Pilot Program Units of Contractors' Computer Codes with New Algorithms", FP5-EAECTP C, Ukraine.
[32] Final report of a joint IAEA-IDEAS project, Intercomparison Exercise on Internal Dose Assessment, 2007. IAEA-TECDOC-1568.
[33] A. Birchall, M.R. Bailey, A.C. James, Ludep : a Lung Dose Evaluation Program, OSTI, 1990. PNL-SA—18562, DE91 004071.
[34] NS-IAEA, "Verification of the LUDEP Software".
[35] C. James, Alan Birchall, James W. Marsh, Naomi S. Jarvis, IMBA Professional Plus (Vers. 4.0) User Manual Appendix C: Dose Quality Assurance, ACJ & Associates Inc, 2005.
[36] Anthony C. Jamaes, Development of computational code for internal dosimetry, in: U.S. Trans Uranium & Uranium Registries(USTUR), IRPA Regional Congress, Tokyo, Japan, 2010.
[37] U.S. Department of Energy, Gap Analysis for IMBA and DOE Safety Software Central Registry Recommendation, 2006. Final Report, DOE/EH-0711.
[38] U.S. Department of Energy, Guidance on Use of IMBA Software for DOE Safety Applications, 2006.
[39] T.Y. Lee, J.K. Kim, J.I. Lee, S.Y. Chang, The BiDAS program : bioassay data analysis software for evaluating radionuclide intake and dose, KAERI, J. Korean Radioactive Waste Soc. 2 (2) (2004) 113–124.
[40] KAERI, Development of Environmental Radiation Protection Technology – Technology Development for Evaluation of Operational Quantities in Radiation Protection, 2002. KAERI/RR-2358/2002.
[41] J.I. Lee, KAERI Internal Dose Assessment Quantity BiDAS Technology Status, KAERI, 2007.
[42] KAERI, The Assessment of Internal Doses for the Korean Nuclear Medicine Workers Based on the 131-I Bioassay Measurement, 2010. KAERI/CR-378/2010.
[43] J.I. Lee, T.Y. Lee, B.W. Kim, J.L. Kim, The Bidas-2007: Bioassay Data Analysis Software for Evaluating a Radionuclide Intake and Dose, Korea Atomic Energy Research Institute, 2009. Technical Note.
[44] KINS, A Study on Preparation of an Appraisal Method and Service Performance Criterion in Internal Exposure Focused on Domestic Nuclear Medicine, 2010. KINS/HR-1007, KRIA/RT-03–2010.
[45] EPA, Characterization and Generation of Metal Aerosols, Interagency Energy-Environment Research and Development, 1978. Program Report, EPA-600/7-78-013.