Removal of Post Etch/Ash Residue on an Aluminum Patterned Wafer Using Supercritical CO_2 Mixtures with Co-solvents and Surfactants: sc-CO_2 Mixture for the Removal of Post Etch/Ash Residue

Seong-sik You[*†]

[*†]School of Energy, Material & Chemical engineering, Korea University of Technology and Education

ABSTRACT

The result of stripping process for the removal of the post etch/ash Photoresist (PR) residue on an aluminum patterned wafer by using supercritical CO_2 (sc-CO_2) mixture, was investigated by scanning of electron microscope (SEM) inspection of wafer, measuring the cloud points and visual observation of the state of sc-CO_2 mixtures. It was found that sc-CO_2 mixtures were made by mixing additives and sc-CO_2 should form homogeneous and transparent phase (HTP) in order to effectively and uniformly remove the post etch/ash PR residue on the aluminum patterned wafer using them. The additives were formulated by mixing and co-solvents like an amine compound and fluoro-surfactants used as HTP agents, and the PR residue on the wafer were able to be rapidly and effectively removed using the sc-CO_2 mixture of HTP. The five kinds of additives were formulated by the recipe of mixing co-solvents and surfactants, which were able to remove PR residue on the wafer by mixing with sc-CO_2 at the stripping temperature range from 40 to 80℃. The five kinds of sc-CO_2 mixtures which were named as PR removers were made, which were able to form HTP within the above described stripping temperature. The cloud points of sc-CO_2 mixtures were measured to find correlation between them and HTP.

Key Words : SCORR, sc-CO_2, Additive, Homogeneous and Transparent Phase, Etch, Ash, PR

1. Introduction

The research on the semiconductor wafer cleaning by using CO_2-based supercritical fluids started by Rubin et al. [1,2] of Los Alamos National Laboratory (LANL) in end of the 1990s. This technology called supercritical carbon dioxide resist removal (SCORR) was studied for the removal of hard-baked PR at the beginning [1]. Until now, various studies have been performed about the removal of PR on post-metal etch/ash wafer, ion implanted wafer, and so on [2,9].

In a conventional semiconductor device manufacturing process, a PR pattern is formed on a conductive layer which has been formed on a semiconductor substrate. The conductive layer whose portion is not covered by the pattern is etched using the PR pattern as a mask to form a conductive layer pattern. This lithography process is then repeated to form the conductive patterns. The PR pattern is used as the mask and it should be removed from the conductive layer in a stripping process after the process for forming the conductive layer pattern is completed. However, it is difficult to remove PR material in the subsequent stripping process since etching process for forming a conductive layer pattern is formed with a dry etching process when making highly integrated devices and, as a result, the physical property of PR is deteriorated during the dry etching process. During dry etching process, ions and radicals included in the plasma etching gas cause a complicated chemical reaction on the surface of a PR

[†]E-mail: ssyou@kut.ac.kr

film which rapidly hardens the PR material.

Specifically, when the dry etching process is performed on metal conductive layers such as aluminum films, titanium films and titanium nitride films, PR polymers on sidewalls of the metal conductive layer are chemically transformed and hardened. Since the PR materials are exposed to plasma gas in dry etching or ashing processes which are used for manufacturing ultra high integrated circuits, it is difficult to remove the PR material. Especially, ashing process performed after etching process is conventionally heated at a high temperature of over 200℃. Here, residual solvent in the PR material should be vaporized and exhausted. However, a hardened PR layer which remains on the metal lines after the ashing process prevents exhaustion of the residual solvents. As a result, the surface of the PR film can be cracked by the residual solvent as internal pressure of the PR film increases during the ashing process. Since the hardened PR layer shattered by the ashing process still remains on metal lines, it is difficult to remove the PR material which is transformed into residues and particles. Such PR material may become polluters and causes to lower yield rate in manufacture of ultra high integrated circuits. When the ashing process is performed before the stripping process to remove the PR material, the transformation of the PR layer is deteriorated, which results in defects during the conventional water-based stripping process.

As a result, the sc-CO_2-based PR stripping (SCPS) process, which is generally called a SCORR, was needed as a new technology for the replacement of the conventional water-based stripping process.

The main fluid of SCORR for stripping PR on semiconductor patterned wafer is supercritical carbon dioxide which behaves as a non-polar organic solvent, but the PR material is mostly the polar material like poly hydroxyl styrene (PHS). So the selection of additives which solubilize the polar contaminants is very important.

Mostly the additive is not simply single solvent, but mixed solvent which is used for removing various contaminants with the minimization of the corrosion of patterned metal. It is very important that the HTP of sc-CO_2 mixture containing the additive must be formed rapidly and maintained during stripping process. At this time, the proper surfactants must be included in additive to form the sc-CO_2 mixture of HTP, which is similar to the type of micro-emulsion [4] is well known, at relatively low supercritical temperature and pressure. The formulation of additive which is the mixture of the various polar components has a huge effect on removing the transformed and hardened PR material, and the finding of stripping condition using sc-CO_2 mixture is also important.

The objective of this study is to find the correlation between the phase behavior of sc-CO_2 mixtures and SCPS process condition and remove post etch/ash residues on aluminum patterned wafers using sc-CO_2 mixtures with co-solvents and surfactants at the SCPS process condition.

2. Experimental

2.1. Materials and analyses

Post aluminum etch/ash wafer was used as a test sample which was supplied by National Nanofab Center (NNFC) in Korea.

On a silicon wafer where a silicon-rich oxide, a titanium film, a titanium nitride film, an aluminum film, a titanium film and a titanium nitride film were sequentially deposited from lower to the upper, portion at 4000Å, 300 Å, 900Å, 8000Å, 100Å and 400Å, respectively, a conventional positive type PR composition sold under the designation of “MF315” by Dongjin Semichem (Korea) was spin-coated to obtain a PR film of 1.2㎛. Thereafter, the PR film was pre-baked on a hot plate for 90 seconds at 110℃. A mask having a predetermined pattern was located on the PR film, and irradiated with ultraviolet rays. Then, the exposed PR film was developed by TMAH developing solution of 2.38wt% to form a PR pattern for 60 seconds at 21℃. A test sample where the PR pattern was formed was hard-baked on the hot plate for 90 seconds at 110℃. The titanium nitride film, the aluminum film and the titanium film were etched using the PR pattern as a mask and Cl_2/BCl_3 mixed gas as etching gas in dry etching equipment (Lam Research, Model : TCP – 9600 DFM) for End Point Detection (EPD) +30% over. Then, the ashing process was performed to remove most of the PR material using O_2 plasma, thereby obtaining test sample (Fig.1). Fig.1 shows the vertical images of the test sample by scanning electron microscope (SEM). After the ashing process, the rabbit ear shaped PR residue still exists on the metal lines of the test sample.

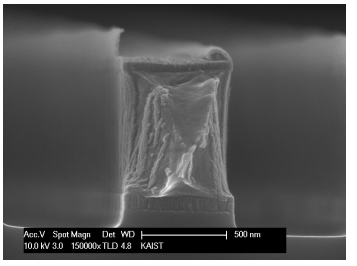

Fig. 1. Reference SEM images of post aluminum etch/ash wafer.

The five kinds of PR removers were prepared as shown in Table 1. The purity of carbon dioxide used as the main fluid of PR removers was 99.99%, the five kinds of additives were included in PR removers. The additives were composed of amine compound, polar solvent, alcohol, and fluoro-surfactants which were used as homogeneous and transparent agents.

SMS50L (Dongwoo-stripper), Mono-ethanol amine (MEA), and 1-methyl-2-pyrrolidone (1M2P) were used as polar solvents, and ethanol was used as an alcohol, and Pentadecafluorooctanoic acid (PFOA), linear mono-hydrated PFOA (RM258) and Tridecafluoroheptanoic acid (PFHA) were used as fluoro-surfactants.

The additive 1 was composed of SMS50L, ethanol, and PFOA. The additive 2 and the additive 3 were composed of MEA, 1M2P, ethanol, and PFOA. The additive 4 was composed of SMS50L, ethanol and RM258. The additive 5 was composed of SMS50L, ethanol and PFHA. SMS50L and ethanol were provided by Dongwoo Fine-CHEM (Korea), PFOA and PFHA were purchased from Sigma-Aldrich (USA) and RM258 was purchased from Miteni (Italy). Additive 2 and additive 3 were composed of the same kind of components but had different compositions, and the above-described three kinds of fluoro-surfactants are used as homogeneous and transparent agents. SMS50L in the additives is generally used for removing PR as a stripper which is used in semiconductor fabrication.

MEA in the additives attacks PR generated by ion implantation process, thereby breaking intra- or intermolecular attraction as a strong alkali compound. As a result, a void is formed in a weak structure of the PR residue, thereby resulting in amorphous gel lumps, which is easily removable from the substrate [10].

1M2P in the additives breaks down the gel lumps separated from the substrate by the MEA, which prevents the PR falling from the substrate from sticking to the substrate again during a stripping process [10].

Ethanol is used for liquefying solid fluoro-surfactants in the sc-CO_2 mixtures and it is also used for rinsing by mixing with sc-CO_2 as a rinsing additive.

By using a high pressure view cell equipped with a window, whether HTP of sc-CO_2 mixture was formed or not was observed, and the cloud points, showing miscibility pressures at certain temperatures, were measured. After SCPS, whether PR polymer residuals were attached on aluminum pattern and on the surface of the line pattern was observed by the scanning electron microscope (SEM; FEI, Sirion) in order to evaluate PR polymer removal performance.

2.2. SCPS Process

This process system was largely classified into pressurizing process, stripping process, rinsing process, and drying process. First, sc-CO_2 mixture of HTP is formed in the pressurizing process, secondly the IIP is removed in the sc-CO_2 based PR stripping(SCPS) process, thirdly sc-CO_2 mixture dissolving the IIP is rinsed out in

Table 1. Additives which were formulated by the recipe of mixing surfactant and co-solvents so as to make it possible to form HTP by mixing with sc-CO_2 at the temperature range from 40 to 80℃.

Additive 1 : SMS50L - 7.1wt%, Ethanol - 10.4wt%, PFOA - 82.5wt%,
Additive 2 : MEA - 2.5wt%, 1M2P - 1.7wt%, Ethanol - 13.1wt%, PFOA - 82.7wt%,
Additive 3 : MEA - 4.9wt%, 1M2P - 1.2wt%, Ethanol - 9.5wt%, PFOA - 84.4wt%,
Additive 4 : SMS50L - 6.1wt%, Ethanol - 7.4wt%, RM 258 - 86.5wt%
Additive 5 : SMS50L - 7.1wt%, Ethanol - 10.4wt%, PFHA - 82.5wt%,

the rinsing process, finally the CO_2 is vented from the high pressure cleaner in a gaseous state without phase transition from a supercritical phase to a liquid phase at a temperature over 35℃.

Fig. 1 shows the diagram of the experimental apparatus for removing the IIP. The experimental system is largely made up of preheating system for controlling temperature, pumping system for feeding and pressurizing, high pressure cleaning system, separation system, and PLC system for controlling automatically.

Referring to Fig. 2, the cleaning apparatus includes a high pressure cleaner, a liquid CO_2 supply source which are connected to the high pressure cleaner, a high pressure CO_2 pump for supplying high pressure CO_2, a cleaning additive supply source for supplying an additive for cleaning and a rinsing additive supply source for supplying an additive for rinsing, preheater installed on supply line to heat CO_2, a line mixer(6.3㎖) for supplying a predetermined amount of cleaning additive while forming a supercritical homogeneous transparent phase(HTP) mixture, a back pressure regulator(BPR) connected to the high pressure cleaner to maintain a predetermined pressure, a separator connected to the high pressure cleaner to separate gaseous CO_2 and a liquid-phase additive from a mixture discharged from the high pressure cleaner, a CO_2 condenser for condensing the partially vaporized CO_2 gas from liquid CO_2, and on-off automatic valves. The liquid CO_2 supply source is connected to the high pressure cleaner via supply line. The cleaning additive supply source and the rinsing additive supply source are connected to the supply line and supply a cleaning additive and a rinsing additive to the line mixer via a cleaning additive supply pump and a rinsing additive supply pump. The line mixer connected to the high pressure cleaner forms a supercritical homogeneous transparent phase mixture by mixing the cleaning additive having atmospheric pressure or a low pressure state with the supercritical CO_2 by using a large pressure difference there between. In addition, the line mixer forms a supercritical rinsing mixture by mixing the rinsing additive and the supercritical CO_2.

The cleaning apparatus of Fig. 2 further includes a magnetic stirrer. The circulation pump is connected to the line mixer. The circulation pump enables the supplied supercritical HTP mixture to be stabilized by formation of an external circulation flow of the high pressure cleaner and a mixing effect and a heat exchanging effect to be improved.

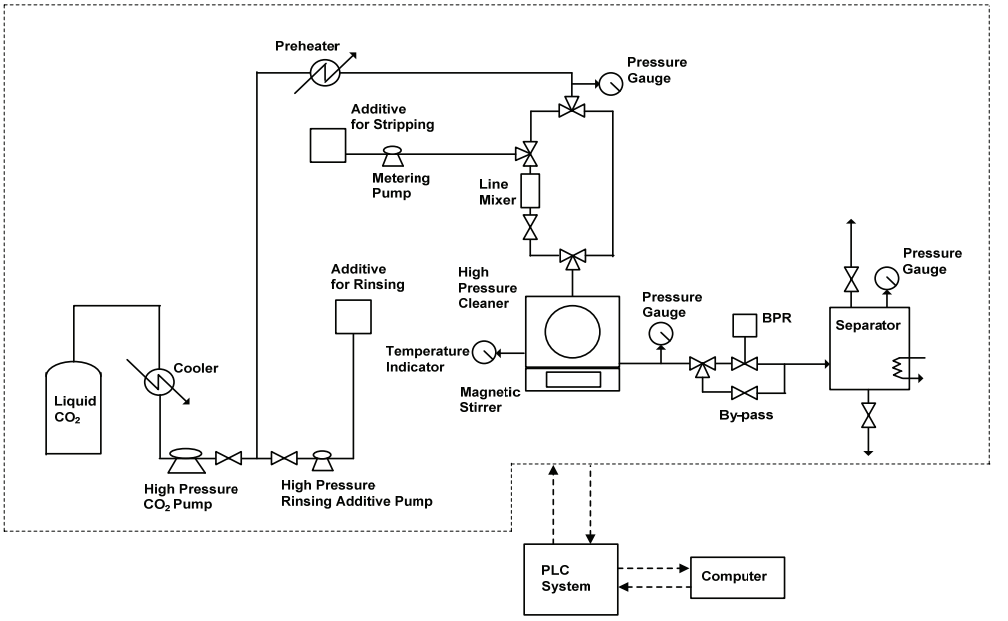

Fig. 2. Schematic diagram of the experimental apparatus used in this study.

In this study, there is provided a cleaning process comprising : loading a wafer piece(1.0cm×2.7cm) in a high pressure cleaner(28㎖); injecting CO_2(greater than 99.99%) having lower pressure than supercritical cleaning pressure into the high pressure cleaner; cleaning the wafer by injecting a supercritical homogeneous transparent phase mixture in which a cleaning additive and supercritical CO_2 are mixed, into the high pressure cleaner under a supercritical cleaning pressure; rinsing the wafer by injecting a supercritical rinsing mixture in which a rinsing additive and supercritical CO_2 are mixed, into the high pressure cleaner; and separating CO_2 from a mixture discharged from the high pressure cleaner. A detailed description of the operating conditions of the rinsing process is given in in the following paper.

3. Results and discussion

3.1. Miscibility of sc-CO_2 mixture for the removal of post etch/ash residue on an aluminum patterned wafer

The data of miscibility of sc-CO_2 mixture were obtained from the experiment of phase equilibria, which was performed by using variable volume view cell, thereby cloud points were able to be found.

The equilibrium tests were performed on the basis of the composition of additives which were formulated to make it possible to remove the IIP by mixing with sc-CO_2, and cloud point pressures and temperatures of the corresponding mixtures were able to be found.

The PR removers in Table 2 are sc-CO_2 mixtures including the five kinds of additives in Table 1. Fig.3 represents the phase behavior of the PR remover 1, 2, 3, 4 and 5 in Table 2.

The range of cloud point pressure is from 73.5 to 162.7 bar about PR remover 1, from 73.3 to 155.2 bar about PR remover 2, from 95.5 to 193.2 bar about PR remover 3, from 74.0 to 164.5 bar about PR remover 4, and from 75.2 to 156.5bar about PR remover 5, respectively, at the temperature range from 40 to 80℃.

Fig. 4 represents the phase behavior of the PR remover 1 with volume% of additive 1. Although the volume ratio between additive and sc-CO_2 in sc-CO_2 mixture varied, the cloud points of the sc-CO_2 mixture with it were almost same, as shown in Fig. 4.

Table 2. PR removers which were formulated by mixing additive and sc-CO_2 to remove post etch/ash residues on aluminum patterned wafers while maintaining HTP at the temperature range from 40 to 80℃.

PR remover 1. Additive 1 in Table 1 : 13.6vol% sc-CO_2 : 86.4vol%
PR remover 2. Additive 2 in Table 1 : 13.6vol% sc-CO_2 : 86.4vol%
PR remover 3. Additive 3 in Table 1 : 18.2vol% sc-CO_2 : 81.8vol%
PR remover 4. Additive 4 in Table 1 : 17.1vol% (12vol%) sc-CO_2 : 82.9vol% (88vol%)
PR remover 5. Additive 5 in Table 1 : 13.6vol% sc-CO_2 : 86.4vol%

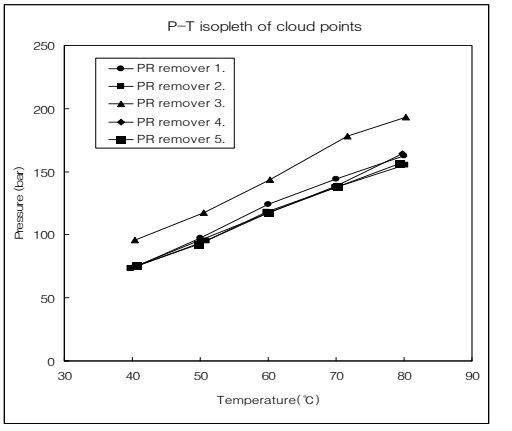

Fig. 3. Phase behavior of PR Remover 1, 2, 3, 4, and 5 presented in Table 2.

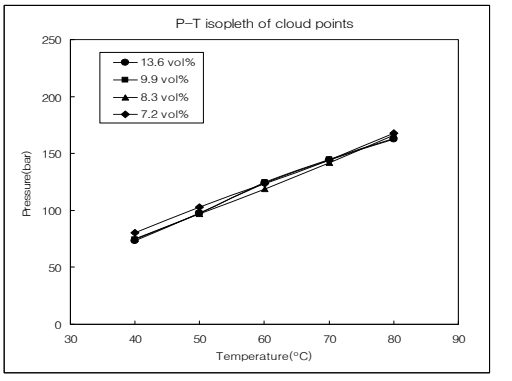

Fig. 4. Phase behavior of PR Remover 1 with volume % of additive 1.

The appropriate stripping pressure for the effective removal of the PR residue on the wafer while maintaining HTP was approximately 50 bar larger than that of the cloud point measured at the stripping temperature from 40 to 80℃.

In order to uniformly and completely remove the post etch/ash PR residue on the wafer, the HTP of PR removers must be formed. The supercritical HTP mixture is immediately formed using a mixing effect by a large pressure difference by injecting CO_2 having higher pressure than the supercritical stripping pressure into the cleaning additive having low pressure in line mixer for effective stripping and decreasing process time. Fig. 5 shows an example of sc-CO2 mixture of HTP. The experiments for the removal of PR on ion-implanted wafers were performed at the temperature range from 40 to 80℃. It was found that approximately 50 bar larger than pressure of the cloud point measured was needed to completely and uniformly strip the IIP on wafers while maintaining HTP stably at the temperature range from 40 to 80℃, by using the sc-CO_2 mixtures including three kinds of additives represented in Table 1. Accordingly, the range of PR stripping pressure is approximately 125 to 215 bar about PR remover 1, from 125 to 205 bar about PR remover 2 and from 150 to 250 bar about PR remover 3, respectively, at the range from 40 to 80℃. On the basis of the result of miscibility test, the experiments of SCPS performed at the temperature range from 40 to 80℃ and the pressure range from 130 to 250 bar.

Fig. 5. An example of sc-CO_2 mixture of HTP (PR Remover 1 in Table 2).

The important thing is that the HTP of sc-CO_2 mixture must be formed for sc-CO_2 based cleaning including PR stripping, especially, in the case of cleaning the semiconductor patterned wafer containing very-fine-scale structure. It was found that in the three kinds of PR Removers, the optimum pressure existed in the range from 130 to 250bar, which was approximately 50 bar larger than that of the cloud point measured, at the temperature range from 40 to 80℃ to optimize the performance for stripping the IIP and to form HTP.

4. Conclusions

In this study, the different additives in sc-CO_2 were formulated and used for removing IIP, and the relation between the effect and the formulation of additives in sc-CO_2 mixture on the removal of IIP was investigated. The following results were obtained by visual observation of the state of sc-CO_2 mixture and measuring the cloud points of it and the fine structure on the wafers after formulating the additive and removing the IIP on the ion implanted wafers by using sc-CO_2 mixture containing it.

Although the volume ratio between additive and sc-CO_2 in sc-CO_2 mixture varied, the cloud points of the sc-CO_2 mixture with it were almost same. The appropriate stripping pressure for the effective removal of the PR residue on the wafer while maintaining HTP was approximately 0.5Mpa larger than that of the cloud point measured at the stripping temperature from 40 to 80℃.

1. In order to increase the solubilizing power of sc-CO_2 for removing the IIP, the additives containing polar co-solvents like MEA and 1M2P are needed and the surfactants are also included in additives to form the homogeneous and transparent sc-CO_2 mixture at relatively low supercritical temperature and pressure. Here, amine mixture as the co-solvents and fluoro-surfactant as the HTP agent must be included in cleaning additives in order to remove the IIP effectively.

2. The optimum additives mixed with sc-CO_2 were able to be formulated to optimize the performance for removing the IIP. The range of cloud point pressure is from 73.5 to 162.7bar about PR Remover 1, from 73.3 to 155.2bar about PR Remover 2 and from 95.5 to 193.2bar about PR Remover 3, respectively, at the range from 40 to 80℃

3. In the case of the formulation PR Remover 1, PR Remover 2 and PR Remover 3 described in Table 1, in order to form HTP and optimize the performance for removing the IIP the optimum pressure existed in the range from 130 to 250 bar, which was approximately 50bar larger than that of the cloud point measured, at the temperature range from 40 to 80℃.

References

1. Rubin, J.B., Davenhall, L.B., Taylor, C.M.V., Sivils, L.D. and Pierce, T., "CO_2-based supercritical fluids as replacements for PR stripping solvents", Internal LANL paper, 1998.
2. Rubin, J.B., Davenhall, L.B., Barton, J., Taylor, C.M.V. and Tiefert, K.,"A comparison of chilled DI water/ozone and CO_2-based supercritical fluids as replacements for PR-stripping solvents", Internal LANL paper, 1998.
3. Banerjee, S., Cross, P., Borade, R., Raghavan, S., and Stevens, R.,"Non-ashing high dose implant strip in IC manufacturing", SEMATECH wafer clean and surface preparation conference, April, 2005.
4. Joseph, M.D., and Keiper, J.S., "Surfactants and self-assembly in carbon dioxide.", Current opinion in solid and materials science, Vol. 5, pp. 333-341, 2001.
5. Shi, J.,"Damage Reduction in Dry Resist Stripping Systems," Solid State Technology, Vol. 38, pp. 75–82, 1995.
6. Okuyama, Y., Hashimoto, T., and Koguchi, T., "High Dose Ion-Implantation into PR," Journal of the Electrochemical Society, Vol. 125, pp. 1293–1298 1978.
7. Flamm, D.,"Dry Plasma Resist Stripping. Part II: Physical Processes," Solid State Technology, Vol. 35, pp. 43–48. 1992.
8. Dopp, D.,"Manufacturing Qualification of an All-Dry Via DeVeil Plasma Process" (paper presented at the Third International Symposium on Environmental Issues with Materials and Processes for the Electronics Semiconductor Industries, Toronto, May 14–18, 2000.
9. Weibel, G.L., and Ober, C.K., “An overview of supercritical CO2 applications in microelectronics processing”, Microelectronics Engineering, Vol. 65, pp. 145-152, 2003.
10. Baik, J.H., WO0114934, Dongjin Semichem Co., Ltd., KR, 2001.

접수일: 2017년 2월 28일, 심사일: 2017년 3월 20일, 게재확정일: 2017년 3월 24일