http://dx.doi.org/10.14400/JDC.2014.12.4.183

Effect of User Possession Attachment and Characteristics of Mobile Media on Acceptance of Mobile AD

Il-Gi Shin*, Yun-Seul Choi, Hyun-Sin Shin*****

Dept. of Culture and Arts Contents, The Catholic University College of Fine Art & Design*

Dept. of Advertising and Public, Hanyang University**

Dept. of Mass Communication, The Society of Cachon University***

모바일미디어 이용자의 소유인식과 상호작용성 구성요인이 모바일광고 수용에 미치는 영향

신일기*, 최윤슬**, 신현신***

인천카톨릭대학교 문화예술콘텐츠학과*, 한양대학교 광고홍보학과**, 가천대학교 언론영상광고학과***

Abstract This study aims to empirically investigate how personalized and socialized mobile media impacts on users' acceptance of mobile advertising, given the consideration of users' mobile possession attachment. For this, the current study used focus group interview and surveyed mobile users. Interestingly, the findings reveal that personalized and socialized mobile characteristicssignificantly affect users' acceptance of mobile ads. That is to say, users' personalized mobile characteristics play an important role in either awareness of mobile ads or exposure to mobile ads.

Key Words : Mobile advertisement, Tendency of online interaction, mobile possession attachment, AD attitude

요 약 본 연구는 모바일 미디어를 통하여 나타나는 확장된 개인의 자아 형성을 여러 관점에서 다양하게 논의하고자 한다. 구체적으로 모바일 미디어의 개인적 특성과 사회적 특성에 따라 모바일 광고 수용에 영향을 미치는 정도를 실증적으로 밝히고자 한다. 특히 주목할 점은 개인이 자신만을 위한 모바일 기기를 소유함으로서 소유인식이나 자아에 영향을 주는 개인의 사회적 차원에 주목하고자 한다. 연구결과 모바일 미디어 사용에서 개인적 이용특성과 사회적 이용 특성과정을 고려할 필요가 있음을 밝혔으며, 가설 검증 결과 모바일의 이용으로 발생하는 사회적 특성과 개인적 특성이 광고인식에 큰 영향을 주는 것으로 나타났으며, 사회적 특성이 보다 개인적 특성이 상대적으로 영향력을 더 미치는 것으로 나타났다. 이는 광고인식의 발생에 있어서 기능중심의 개인적 특징이 광고에 대한 지각이나 노출이라는 측면에서 영향력이 큰 반면 사회적 특징과 관계적 특징이 향 후 내면적 인식에 따른 상호작용성에 중요한 역할을 함을 시사하고 있다.

주제어 : 모바일미디어 특성, 모바일광고, 온라인 상호작용성, 소유인식, 광고태도

1. Introduction

Mobile media, enabled the entry into ubiquitous computing society by the development of information technology. The characteristics of mobile media

*본 논문은 가천대학교에서 연구 후원하였습니다.

Received 20 February 2014, Revised 5 March 2014
Accepted 20 April 2014

Corresponding Author: Hyun-Sin Shin(Dept. of Mass Communication, The Society of Cachon University)
Email: gcgcad@hanmail.net

ISSN: 1738-1916

© The Society of Digital Policy & Management. All rights reserved. This is an open-access article distributed under the terms of the Creative Commons Attribution Non-Commercial License (http://creativecommons.org/licenses/by-nc/3.0), which permits unrestricted non-commercial use, distribution, and reproduction in any medium, provided the original work is properly cited.

including idiocentric, extemporaneity, and immediacy are different from the ones of traditional media[1].

In light of this, previous research on mobile media has debated mobile users' ego or characteristics in advance[2]. Because the characteristics of mobile personalized by users have shown to influence on users' attitude toward mobile ads.

To date, prior research on mobile has paid more attention to either mobile ads contents or motivation to watch mobile ads. Accordingly, the current study posits that it is important to primarily examine the link between users' psychological and sociological characteristic and their attitude toward mobile ads.

Thus, the aim of this study is to take account into how mobile users characterize their Smart-phone usage, and how this affects on users' awareness of mobile ads as well as their acceptance of mobile ads.

2. Literature reviews

2.1 Interaction and possession attachment of Mobile Media

Mobile users experience, recognize social relationship, social mobility, and social existence through mobile media. According to Ito and Okabe[3], mobile media allows people to socially interact with others and that, through this process, people could identify themselves more. In other words, individual's has important effect on the change of social existence, social mobility, and social relationship.

In terms of psychological attachment to own materials, more interestingly, the stronger owners' attachment toward the materials is, the stronger the connection between owners and materials is and the level of attachment shows in various way depending on objects[4]. So, Bowlby[5] and Belk [6] importantly applied the concept of attachment into explaining mobile media use.

From this perspective, this study attempts to further analyze the following; : the effect of organizing factors of personal and social interaction on mobile advertisement, and the concept of possession attachment and mobile media, by considering various internal psychological effects between mobile media and users.

2.2 Recognition of Mobile Media Advertisement

Recognition of advertisement followed by media interaction is one of important aspect to verify Ads recognition has been considered as a important predictor of the efficacy[7].

According to Heeter[7], when it comes to media selection, there are important factors such as complexity, quantity of receiving information, reactivity, acceptability, and interpersonal communication.

As well, Anderson[8] introduced five components of interaction (e.g. flow of information, extemporaneity, immediate feedback, reactive interaction, and individualized contents) to affect both advertising recognition and attitude toward media. that affect recognition of advertisement and change in attitude of media as following: flow of information, extemporaneity, immediate feedback, reactive interaction, and individualized contents. In other words, existing studies such as ones mentioned above definein order to develop the model of ads effectiveness, the judgment criteria for influence depending on effective model of advertising.

Thus, it should be noticed there are important interactions between mobile users and mobile, which affect on recognizing mobile ads and hence result in accepting mobile ads.

2.3 Aspects of Advertising Impact on Acceptance of Mobile Media

Given the complicated linkages among the components of mobile media interactions, ads recognition, mobile possession attachment, ads

effectiveness could be assessed by the following propositions; first, ads attitude conceptually refers to the degree of consumers' positive feeling towards ads. And The process of accepting ads can be explained upon the change in consumers' attitudes, and here advertisement attitude means receiver's favorable reaction against particular advertisement stimulation under particular situation of exposure[9]. So, attitude towards advertisement is a key aspect that accurately tells not only the change of user's recognition, but also information of advertisement and the degree of good feeling.

Second, word of mouth intention is defined as the flow of information that is delivered orally. Various studies on word of mouth through new media are in progress, classified by channels, forms of message, and types of products[10].

Third, invasiveness on advertisement suggests that consumer will consider an advertisement as invasive material and feel annoyed if advertisement interrupts consumer's handling of information. According to a study of Edward, Hairoung and Lee [11], which analyzed the relationship between invasiveness of online advertisement and advertising avoidance, users feel annoyed and tend to evade advertisements when they are considered invasive.

Fourth, advertising avoidance refers to all behaviors that cause media users to decrease their exposure of advertisement messages, leaving invasiveness aside. Speck and Elliot[12] have studied leading figures that affect on advertising avoidance on four primary medias, including television, radio, newspapers, and magazines. Also, Ducoff[13] looked into the influence about positive side of advertisement and avoidance in his research about leading figures that affects on creation of advertisement consumers' attitudes toward online advertisement.

Overall, mobile advertisement not only creates advertisement attitude, but also affects on word of mouth; on the other hand, however, invasiveness and

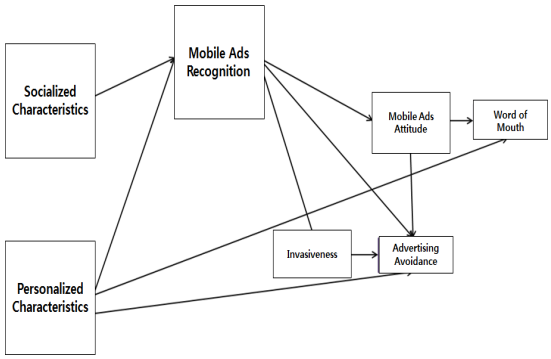

[Fig. 1] research model

advertising avoidance are occurred because of strong possession attachment. Thus, this study will focus on the influence of mobile media users' interaction and possession attachment on recognition of advertisement, and its process.

3. Research Hypothesis

The current study reviews how personalized and socialized mobile is theoretically related to acceptance of mobile ads. On the basis of literature review:

H 1-1. The socialized characteristics of mobile use (e.g. existence, mobility, and relationship) is positively related to mobile ads recognition.

H 1-2. The personalized characteristics of mobile use(e.g. possession attachment, individuality, entertainingness, and usefulness) is positively related to mobile ads recogntioin.

H 2-1. Mobile ads recognition (e.g. convenience, utility, and economic feasibility) is positively associated with mobile ads attitude.

H 3-1. The socialized characteristics of mobile uses is positively related to word of mouth intention.

H 3-2. The personalized characteristics of mobile use is positively related to word of mouth intention.

H 3-3. Mobile ads is positively related to word of mouth intention.

H 4-1. Mobile ads recognition is negatively a sociated with perceived invasiveness.

H 5-1. The socialized characteristics of mobile use is negatively connected to ads avoidance.

H 5-2. Mobile ads attitude is negatively related to ads avoidance.

H 5-3. Perceived invasiveness is positively related to ads avoidance.

4. Method

4.1 Method

Data for the present study was collected in December, 2013. A total of 550 college students from a Gachon university and Hanyang university participated in this study via a paper-and-pencil survey. The collecting method for statistical analysis was survey, filled by 500 respondents in, and was utilized for the result of study. Each question in the survey had seven point scales and the number of questions were 70. Respondents were all in college student group. They were selected as appropriate sample object, because they are in their teens or twenties, which are the groups with the highest level of interest or dependence on mobile use.

4.2 Measurement of Major Factors

4.2.1 Personalized and socialized characteristics of mobile use

Individuality

Individuality means the degree of providing customized products, services, or information that can fulfill individual's needs[14]. This study has composed four categories based on Srinivasan's research[14].

Entertainingness

Ducoffe[13] regards entertainingness as an important factor of web ads effectiveness. This study has composed five categories based on Ducoffe's research[13].

Usefulness

Davis[16] and his colleagues defines usefulness as the degree of realizing or recognizing. This study has composed four categories based on research of Davis et al. [16].

Existence

Existence considers as the affectiveness of being with others in imaginary space. This study has composed four categories based on research[16].

Mobility

Kakihara and Sorenson[17] proposes change in mobility recognition, which carries branches into 'spatial mobility' and 'temporal mobility.' This study has composed six categories based on research of Kakihara and Sorenson[17].

Relationship

Relationship means the characteristic of social relationship through mobile media[18]. This study has composed six categories based on recent research that seeks relationship between interaction and social capital using mobile media.

Possession attachment

Belk[6] notices that people consider their property as a part of themselves because they tend to link their ego to it. This study has composed six categories based on research.

4.2.2 Mobile ads recogntion

Economic Feasibility

Ducoffe[13] defined economic feasibility as attitude

towards social and economic influence on mobile ads recognition. This study has composed five categories based on Ducoffe[13]

Utility

Effective model of web advertisement revealed that there is great static correlation among influences of utility of advertisement on advertisement attitude, information, and value of advertisement. This study has composed five categories based on Ducoffe[13].

Convenience

This study expects convenience to affect in various ways on forming of attitude about mobile advertisement, and has composed four categories based on Ducoffe[13].

4.2.3 Mobile ads Attitude and Word of Mouth Intention

Fishbein and Ajen[19] are generally used for attitude toward mobile advertisement. Thus, this study has composed nine categories based on existing leading researches. Meanwhile, word of mouth intention has been categorized into five, based on the concept of online word of mouth action[19].

4.2.4 Perceived iInvasiveness and mobile ads Avoidance

Invasiveness is considered as the interruption of advertisement on the flow of media contents. This study has composed five measuring categories for criterion[11]. In addition, advertising avoidance has been categorized into seven[12].

4.3 Analysis

This study that data coding and data cleaning, the collected data turned into statistical data. SPSS 18.0 for windows and AMOS18.0 were used for statistical analysis of collected data.

5. Results

5.1 Characteristics of Research Target

The data was collected from college students. This research implemented a survey that target users of online brand community. The demographic characteristic is as follows: out of 500 respondents, there were 242 males(48.4%) and 258 females(51.6%), and 37.4 % of paricipants (187) are at age 19 to 21 years. age group of 19 to 21 had the most number of 187 (37.4%). Reliability coefficient, which considers it reliable if above .60, was adopted here.

In addition, 179 of respondents (35.8%) have participated in the brand community during 1 or 2 years. Had 1 to 2 years of ‘period of activity on the brand community,’ resulting the highest number in the category. Meanwhile, 136 of respondents (27.2%) , during 3 months to 1 year, 105 of participants (21.0%) ,more than 2 years, and 80 (16.0%),less than 3 months Therefore, most of the research targets had characteristic of actively participating on online community.

5.2 Reliability Analysis Result

In this study, internal consistency method is adopted out of various reliability analysis methods for accuracy of measurement tool. For this purpose, Cronbach′s Alpha was used. Thus, the criteria of reliability analysis among questions on primary factors, which is derived from analysis on those primary factors, was set as >.60, and drew a result of high level of reliability coefficient after reliability verification.

5.3 Validation of Measuring Tools

Confirmatory Factor Analysis method was employed for construct validity test of measuring tools. Suitability of structural equating model around CFI, RMR, and GFI index was on judge for Confirmatory Factor Analysis or CFA in short. Referring to the suggested statistics of goodness of fit index of

measuring method model on advertising impact process, this study exceeds the criteria of optimal index with figures of RMR=.121, CFI=.970, NFI=.907, and GFI=.901. Moreover, other goodness of fit indexes also fulfill the criteria of optimal index. This means that items in detail explain potential facts well, and the measuring tools for advertising impact process was confirmed to have concentrated validity in Table 1.

〈Table 1〉 Result of Goodness of Fit Analysis on Measuring Tool Model

absolute fit index	χ^2	RMR	GFI
statistics	x^2 2412.95... (df = 1429)	0.044	0.964
incremental fit index	NFI	CFI	
statistics	.901	.970	

5.4 Recognition of Mobile Advertisement based on Use Characteristic of Mobile Media

This research has examined the impact of personalized and socialized characteristics of mobile use on mobile ads recognition. As a result, both characteristics statistically influcenced the recognition. Concretely, the first two hypotheses were supported <Research Hypothesis 1-1> (estimated figures of standardization = .129, p=.001) and support of analysis result on <Research Hypothesis 1-2> (estimated figures of standardization = .442, p=.001, see Table 2).

〈Table 2〉 Decision Factor of Recognition of Mobile Advertisement about Use Characteristic on Mobile Media

Classifications			Estimate	S.E.	t-value	*p*
S.C	-->	M.A.R	0.129	0.038	3.371	***
P.C	-->	M.A.R	0.442	0.073	6.083	***

*p<.05, **p<.01, ***p<.001

5.5 Decision Factor on Mobile Advertisement Attitude

The analysis supported that mobile ads recognition positively influence mobile ads attitude <Research Hypothesis 2-1> (estimated figures of standardization = .318, p=.008). Thus, compared to other variables on acceptance of advertisement, recognition of mobile advertisement influences relatively greater in Table 3.

〈Table 3〉 Decision Factor on Mobile Advertisement Attitude

Classifications			Estimate	S.E.	t-value	*p*
M.A.R	-->	A.A	0.318	0.12	2.659	0.008*

*p<.05, **p<.01, ***p<.001

5.6 Determinants on Word of Mouth Intention

The analysis produced that socialized chracteristics of mobile use is not significantly associated with word of mouth intention in contrast to mobile ads attitude. Mobile advertisement attitude has statistically meaningful influence on word of mouth intention.

Specifically, analysis result on <Research Hypothesis 3-1> (estimated figures of standardization = .078, p=.197) did not reach significance level at p <0.1, and analysis result on <Research Hypothesis 3-2> (estimated figures of standardization = .091, p=.095) did not reach significance level at p <0.1. Meanwhile, the research was supported by analysis result on <Research Hypothesis 3-3> (estimated figures of standardization = .673, p=.001, see Table 4).

〈Table 4〉 Decision Factor on Word of Mouth Intention

Classifications			Estimate	S.E.	t-value	*p*
S.C	-->	M.I	-0.078	0.06	-1.289	0.197
P.C	-->	M.I	0.091	0.088	1.034	0.095
A.A	--->	M.I	0.673	0.083	8.142	***

*p<.05, **p<.01, ***p<.001

5.7 Decision Factor on Invasiveness

This research explored how either mobile ads recognition or mobile ads attitude affects mobile invasiveness. The influence that recognition of mobile advertisement and advertisement attitude have on invasiveness. As a result, hypothesis 4-1 was

supported (estimated figures of standardization = .162, p=.001, see Table 5).

〈Table 5〉 Decision Factor on Invasiveness

Classifications			Estimate	S.E.	t-value	*p*
M.A.R	->	Invasiveness	-1.762	0.28	-6.299	***

*p<.05, **p<.01, ***p<.001

5.8 Decision Factor on Advertising Avoidance

When it comes to mobile ads avoidance, personalized and socialized characteristics of mobile use, mobile ads recognition, mobile ads attitude and avoidance are tested. social use characteristic and personal use characteristic, recognition of mobile media advertisement, mobile media advertisement attitude, and invasiveness have on advertising avoidance. As a result, hypothesis 5-1 is supported (estimated figures of standardization = .052, p=.004), hypothesis 5-2 supported (estimated figures of standardization = .220, p=.005), and hypothesis 5-3 supported (estimated figures of standardization = .129, p=.001). Thus, not only mobile ads attitude also mobile ads invasiveness are significantly associated with mobile ads avoidance in Table 6.

5.8 Decision Factor on Advertising Avoidance

When it comes to mobile ads avoidance, personalized and socialized characteristics of mobile use, mobile ads recognition, mobile ads attitude and avoidance are tested. social use characteristic and personal use characteristic, recognition of mobile media advertisement, mobile media advertisement attitude, and invasiveness have on advertising avoidance. The findings reveal that hypothesis 5-2 is not supported (estimated figures of standardization = .109, p=.126) while, hypothesis 5-1 is supported (estimated figures of standardization = .052, p=.004), hypothesis 5-3 supported (estimated figures of standardization = .220,

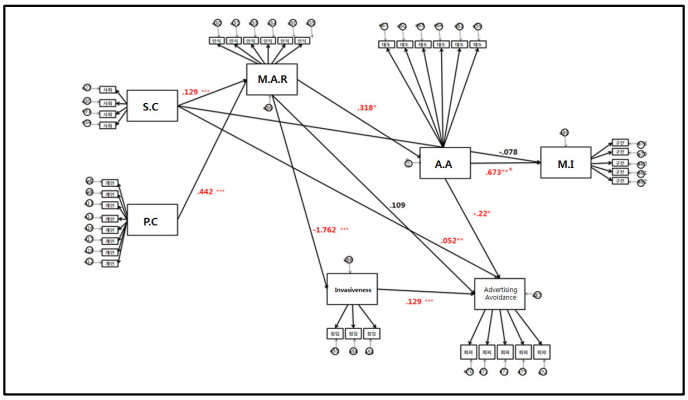

[Fig. 2] correction model

〈Table 6〉 Decision Factor on Advertising Avoidance

Classifications			Estimate	S.E.	t-value	*p*
S.C	--->	Advertising Avoidance	0.052	0.025	2.055	0.04**
A.A	--->	Advertising Avoidance	-0.22	0.078	-2.813	0.005*
invasiveness	--->	Advertising Avoidance	0.129	0.039	3.272	***

*p<.05, **p<.01, ***p<.001

p=.005), and hypothesis 5-4 supported (estimated figures of standardization = .129, p=.001). Thus, not only mobile ads attitude also mobile ads invasiveness are significantly associated with mobile ads avoidance in Table 6.

6. Conclusion and Discussion

The summary of conclusion is as follows. First, according to the result of verifying personal characteristic and social characteristic on mobile, social and personal characteristic caused by using mobile greatly influence recognition of advertisement, while personal characteristic has greater influence than social characteristic does. Through such result, it is clear that expansion of ego that indentifies others and oneself occurs during process of communication using mobile media, and reinforcing participation in communication and users' possession attachment is important due to occurrence of attachment and possession attachment(P.A).

Second, according to the result of verifying mobile media characteristic and recognition of advertisement, personal characteristic of mobile media has relatively greater influence. In other words, when outside message is needed while changing mobile users into perspective of consumer, in case of advertising message, it has greater advertising impact.

Third, in case of influence on mobile advertisement attitude, it turns out to be somewhat positive. This suggests that mobile, which has values that satisfy personal characteristic and are socially sharable, influence mobile in positive ways, in case of advertising message.

Fourth, word of mouth intention seems to not affect meaningfully on social characteristics. This shows that word of mouth occurs when advertisement is a factor that reinforces mobile social characteristic and mobile personal characteristic. Therefore, if elements of social and personal characteristics in mobile media are activated in positive ways, word of mouth intention increases.

Fifth, it is found that recognition of invasion occurs based on the degree of advertisement attitude. Types and methods of approach of advertisement can differ depending on bigger influence among personal or social characteristics.

Sixth, In case of advertisement avoidance, social characteristic is influential. This suggests that advertisement can be recognized as aspects that hinder the mobile media usage while performing social relationship.

The implication of this research is its verification on how organizing factors of interaction influence advertising impact from various sides. Also, it is meaningful because it concretize the concepts that have been discussed only conceptually or partially proved and it is practical research verification on the dimension of mobile media's user characteristics and the process of accepting AD.

It has significance as operationally verifying the research on possession attachment(P.A) advertising impact process on mobile, which has been verified only in conceptual ways so far. In other words, it helps to understand the influence that social and personal characteristics on mobile media and possession attachment(P.A) have influence future advertising strategy and effect of messages.

The limit of this research is as follows. First, mobile adoption process or experimental research through content analysis on advertisement has not been done. Second, the whole generalization is somewhat overdone, because this research was studied in focus around college students, not general mobile phone users; research with expansion on users seems necessary in future.

ACKNOWLEDGMENTS

This paper supports Gachon University campus principal journals votes. (GCU-2013-R341)

REFERENCES

[1] Gergen, "The Challenge of absent Presence", In E. Katz and M. Aakhus(eds), Perpetual Contact: Mobile Communication, Private Talk, Public Performance, Cambridge: Cambridge University Press, 2002.

[2] Sooyoung Lee & Gahyoung Nai , "Audience Activity in Micro-blog - Exploring Production Activity in Twitter and Me2day,", Korea Communications Agency, Vol. 73, pp. 171-200, 2003.

[3] Ito, Mizuko & Daisuke Okabe, "Intimate Connections: Conceptualizing Japanese Youth and Mobile Messages", edited by Robert Kraut, Kakihara, M and Sorenson, C. (2001), Expanding the 'Mobility Concept. SIGGROUP BULLTIN, Vol. 22, No. 3, pp. 33-37, 2006.

[4] Ball. A. D., & L. H. Tasaki, "The Role and Measurement of Attachment in Consumer Behavior", Journal of Consumer Psychology, Vol. 1, No. 2, pp. 155-172, 1992.

[5] Bowlby, J., "Attachment and loss", Vol.1. Attachment. London: Hogarth Press, 1979.

[6] Belk, R., "Possessions and the Extended Self", Journal of Consumer Research, Vol. 15, pp. 139-168, 1988.

[7] Heeter, C., "Implications of new interactive technologies for conceptualizing communication"; In J. L. Salvaggio & J. bryant (Eds.), Media use in the information age: Emerging patterns of adoption and consumer use, pp. 217-235. NJ: Lawrence Erlbaum Associaties, 1989.

[8] Anderson, James C. & David W. Herbing (1988). Structural Equation Modeling in Practice : A Review and Recommended Two-Step Approach. *Psychological Bulletin*. vol. 103, No. 3, pp. 411-423.

[9] Lutz, R. J., "An Experimental Investigation of Causal Relations among Cognition, Affect and Behavioral Intention", Journal of Consumer Research, Vol. 3, pp. 197-208, 1997.

[10] Hu. Fu. & Liu. Y., "An empirical examination on mobile services adoption in rural China", International Journal of Digital Content Technology and its Application, Vol. 5, No. 1, pp. 328-334, 2011.

[11] Edwards, Steven M., Hairoung Li & Joo-Hyun Lee., "Forced exposure and psychological reactance: The perceived intrusiveness of rich media pop-up ads", Journal of Advertising, Vol. 31, No. 3, pp. 95-107, 2002.

[12] Speck, Paul S. & Michael T. Elliott, "Predictors of Advertising Avoidance in Print and Broadcasting Media", Journal of Advertising, Vol. 26, NO. 3, pp. 61-76, 1997.

[13] Ducoffe, R. H., "Advertising value and advertising on the web", Journal of Advertising Research, Vol. 36, No. 5, pp. 21-35, 1996.

[14] Srinivasan at al. (2002). Customer loyalty in e-commerce: an exploration of its antecedents and consequences. *Journal of Retailing*. Vol. 78, No. 1, Spring 2002, 41-50.

[15] Davis, F. D., Bagozzi, R. P., & Warshaw, P. R., "User acceptance of computer technology: A comparison of two theoretical models", *Management Science*, Nol. 35, NO. 8, pp. 982-1003, 1989.

[16] Bruner II, G., & Kunar, A.(2000). Web commercials and advertising hierarchy-of-effects. *Journal of advertising Research*. vol. 40, No. 1/2, pp. 35-42.

[17] Kakihara, M and Sorenson, C. (2001), Expanding the 'Mobility Concept. *SIGGROUP BULLTIN*, Vol. 22, No. 3, pp. 33-37.

[18] Arts, J. W. C., Frambach, R. T., & Bijmolt. T. H. A., "Generalizations on consumer innovation adoptions: A meta-analysis on drivers of intention and behavior", International Journal of Research in Marketing, Vol. 28, No. 2, pp. 134-144, 2011.

[19] Fishbein, M., & Ajzen, I. (1975). *Belief, attitudes, intention, and behavior: An introduction to theory and research*, Addison-Wesley, Reading, M.A.

신 일 기(Shin, Il Gi)

- 2002년 2월 : 카톨릭대학교 경영학과(경영학사)
- 2005년 2월 : 한양대학교 광고호보학과(문학석사)
- 2010년 2월 : 한양대학교 언론정보대학원(이학박사)
- 2013년 2월~현재 : 인천카톨릭대학교 문화예술콘텐츠학과 교수
- 관심분야 : 미디어융합, 미디어스토리텔링으로
- E-Mail : shinilgi@iccu.ac.kr

최 윤 슬(Choi, Yun Seul)

- 2009년 2월 : 남서울대학교 광고홍보학과(경영학사)
- 2011년 2월 : 한양대학교 광고홍보과(문학석사)
- 2013년 2월 ~ 현재 : 한양대학교 박사 수료
- 관심분야 : 광고 미디어, 문화 콘텐츠, 소비자 심리
- E-Mail : bl7yllw@naver.com

신 현신(Shin, Hyun Sin)

- 1987년 2월 : 서강대학교 신문방송학과(언론학사)
- 1990년 2월 : 서강대학교 신문방송학과(언론석사)
- 2011년 2월 : 서강대학교 신문방송학과(언론박사)
- 현재 : 가천대학교 언론영상광고학과 교수
- 관심분야 : 뉴미디어와 광고, 문화연구
- E-Mail : gcgcad@hanmail.net