JPE 9-5-8

Single-Phase Z-Source AC/AC Converter with Wide Range Output Voltage Operation

Minh-Khai Nguyen*, Young-Gook Jung†, and Young-Cheol Lim*

*Dept. of Electrical Engineering, Chonnam National University, Gwang-ju, Korea
†Dept. of Electrical Engineering, Daebul University, Yongam-Gun, Chonnam, Korea

ABSTRACT

A new type of single-phase Z-source AC/AC converter based on a single-phase matrix converter is proposed in this paper. The proposed single-phase Z-source AC/AC converter has unique features; namely that the output voltage can be bucked and in-phase/out-of-phase with the input voltage; that the output voltage can be boosted and in-phase/out-of-phase with the input voltage. The converter employs a safe-commutation strategy to conduct along a continuous current path, which results in the elimination of voltage spikes on switches without the need for a snubber circuit. The operating principles of the proposed single-phase Z-source AC/AC converter are described, and a circuit analysis is provided. To verify the performance of the proposed converter, a laboratory prototype based on a TMS320F2812 DSP was constructed. The simulation and the experimental results verified that the output voltage can be bucked-boosted and in-phase with the input voltage, and that the output voltage can be bucked-boosted and out-of-phase with the input voltage.

Keywords: Z-source converter, PWM AC/AC converter, Single-phase matrix converter, Commutation strategy, Wide range output voltage operation

1. Introduction

For AC/AC power conversion, the most popular topologies are indirect AC/AC converters with a DC link and direct pulse width modulation (PWM) AC/AC converters. An indirect AC/AC converter can provide output voltage with a variable frequency. However, for applications where only voltage regulation is needed, the direct PWM AC/AC converters have merits such as providing a good power factor, high efficiency, low harmonic current in line, single-stage conversion, a simple topology, ease of control, small size and low cost [1]-[3]. The AC/AC conversions or AC/AC line conditioners can also perform conditioning, isolating, and filtering of the incoming power in addition to voltage regulation [1], [3]. The traditional direct PWM AC/AC converters are implemented by AC thyristor power controllers which use phase angle or integral cycle control of the AC supply to obtain the desired output voltage. However, they have some major disadvantages such as high total harmonic distortion (THD) in the source current, a low power factor

Manuscript received April 23, 2009; revised Aug. 6, 2009
†Corresponding Author: jyg@mail.daebul.ac.kr
Tel:+81-61-469-1263, Fax:+81-61-469-1299, Daebul University
Dept. of Electrical Eng., Daebul University, Korea
*Dept. of Electrical Engineering, Chonnam Nat'l Univ., Korea

and poor power transfer efficiency. The traditional single-phase Z-source AC/AC converters proposed in [1], [2] have the following features: the output voltage can be boosted and in-phase with the input voltage; the output voltage can be bucked-boosted and out-of-phase with the input voltage. However, in the conventional single-phase Z-source AC/AC converters proposed in [1], [2] the output voltage cannot be bucked, and in-phase with input voltage. In addition, with this converter it is very difficult to control exactly when the output voltage operates in boost mode and out-of-phase with the input voltage. It was reported that the use of safe-commutation switches with PWM control can significantly improve the performance of AC/AC converters[2]-[11]. Direct PWM AC/AC converters can be used to overcome voltage sags, swells [12] or compensate for static VAr[13] in power systems.

A matrix converter is an AC/AC converter that can directly convert an AC power supply voltage into an AC voltage of variable amplitude and frequency without a large energy storage element[7]-[11]. The first study of a single-phase matrix converter was performed by Zuckerberger[14], on a frequency step-up and fundamental voltage step-down converter. The research in [15], [16] focused on step-up/step-down frequency operation with a safe-commutation strategy. The single-phase Z-source buck-boost matrix converter proposed in [6], [7] can provide a wide range of output AC voltages in buck-boost mode and step-up/step-down frequencies with a safe-commutation strategy.

In this paper, we present a new type of single-phase Z-source PWM AC/AC converter based on a single-phase Z-source buck-boost matrix converter topology [6], [7]. The proposed single-phase Z-source PWM AC/AC converter can provide four different operation regions; namely the buck in-phase mode (region (I)) when the output voltage is bucked and in-phase with the input voltage; the boost in-phase mode (region (II)) when the output voltage is boosted and in-phase with the input voltage; the buck out-of-phase mode (region (III)) when the output voltage is bucked and out-of-phase with the input voltage; and the boost out-of-phase mode (region (IV)) when the output voltage is boosted and out-of-phase with the input voltage. We use a safe-commutation technique which is very simple to implement as a free-wheeling path to provide the required free-wheeling operation similar to what is available in other converter topologies. The safe-commutation scheme establishes a continuous current path in dead time to eliminate voltage spikes on switches without a snubber circuit. We show from operating principles, analyses, simulation, and experimental results that the proposed single-phase Z-source AC/AC converter can buck and boost voltages in four different operation regions. The operating principle and circuit analysis for the proposed converter are shown. To verify the operation of the proposed converter, we constructed a laboratory prototype based on a TMS320F2812 DSP. We also performed a participative simulation integral manufacturing (PSIM) simulation. The simulation and experimental results both show that the converter has four different operation regions such as buck in-phase mode (region (I)), boost in-phase mode (region (II)), buck out-of-phase mode (region (III)), and boost out-of-phase mode (region (IV)). The proposed converter acts like a "solid-state transformer" with a continuously variable turn ratio. The proposed converter can be used as a dynamic voltage restorer (DVR) to compensate for voltage sags and swells in AC/AC line conditioning without a large energy-storage devices requirement. The feature where the output voltage is bucked-boosted and in-phase with the input voltage is used for voltage sag compensation. The feature where the output voltage is bucked-boosted and out-of-phase with the input voltage is used for voltage swell compensation.

2. Proposed Topology

Fig. 1(a) and (b) show the proposed single-phase Z-source AC/AC voltage-fed buck/boost converter and current-fed buck/boost converter topologies, respectively. It employs a Z-network, bi-directional switches, a L_fC_f output filter and R load. The symmetrical Z-network, a combination of two inductors and two capacitors, is the energy storage/filtering element for the proposed converter. Since the switching frequency is much higher than the AC input source frequency, the inductor and capacitor requirements should be low[1]. As shown in Fig. 1, the proposed converter requires four bi-directional switches S_{1j}, S_{2j}, S_{3j}, S_{4j} ($j = a, b$), to serve as a single-phase

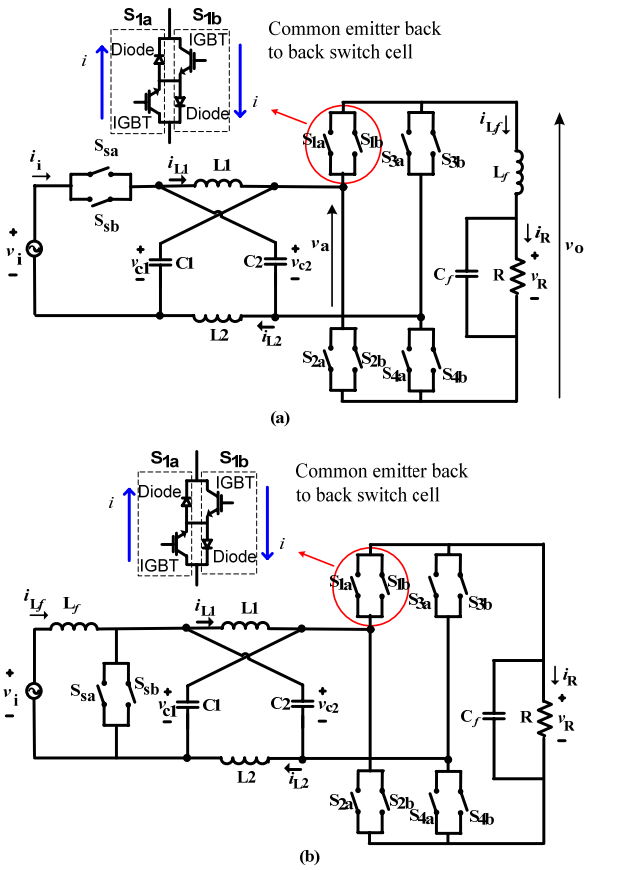

Fig. 1. Proposed single-phase Z-source ac-ac converter topology based single-phase matrix converter. (a) Voltage-fed. (b) Current-fed.

matrix converter and a one source bi-directional switch S_{sj} (j = a, b), where a and b refer to drivers 1 and 2, respectively. All bi-directional switches are common emitter back to back switch cells [4], [6]-[8].

Because the proposed converter is based on a matrix topology, the output voltage can be made to be in-phase or out-of-phase with the input voltage easily. Moreover, the output voltage can be step-up/step-down because a Z-source network is employed. Thus, the output voltage can be step-up/step-down and in-phase/out-of-phase with the input voltage. Therefore, the proposed single-phase Z-source AC/AC PWM converter inherits all of the advantages of the traditional single-phase Z-source AC/AC PWM converter in [1], [2]; namely that the output voltage is boosted and in-phase with the input voltage; and that the output voltage is bucked-boosted and out-of-phase with the input voltage. In addition, the proposed single-phase Z-source AC/AC PWM converter has unique advantages; the output voltage can be bucked and in-phase with the input voltage; and the output voltage can buck-boost with step-changed frequency, in which the frequency and voltage can be step-up/step-down as presented in [7].

3. Switching Strategy Solving the Commutation Problem

3.1 Commutation Problem

The five switches S_{sj}, S_{1j}, S_{2j}, S_{3j}, S_{4j} (j = a, b) used in the converter are bi-directional switches, as shown in Fig. 1. The bi-directional switches are able to block voltage and conduct current in both directions. Because these bi-directional switches are not available at present, they can be substituted for by combinations of two diodes and two insulated-gate bipolar transistors (IGBTs) connected in anti-parallel (common emitter back to back), as shown in Fig. 1 [6]-[8]. The diodes are included to provide the reverse blocking capability. The IGBTs are used because of their high switching capabilities and their high current-carrying capacities, which are desirable for high-power applications. A change in current due to PWM switching will result in current and voltage spikes. Note that the current spikes are generated by the short circuit or shoot-through path, and voltage spikes are produced because of inductance's current derivative. Both will destroy the switches due to stress [2], [4], [6], [7], [8], [15]. Suppose that S_{sj}, S_{1j}, S_{4j} (j = a, b) are turned on and conduct current. After a time, we want to commutate the current to S_{2j}, S_{3j} (j = a, b). Theoretically, the switching must be instantaneous and simultaneous. For practical realization, we have to take into account finite switching times and delays in the drive circuits and switches. So, if S_{2j}, S_{3j} (j = a, b) are turned on before S_{sj} (j = a, b) is turned off, a short-circuit path or shoot-through path is established through $V_i - S_{sj} - C_2 - S_{3j} - S_{1j} - C_1$ or $V_i - S_{sj} - C_2 - S_{4j} - S_{2j} - C_1$ and current spikes will destroy the devices. Similarly, if S_{sj} (j = a, b) is turned off before S_{2j}, S_{3j} (j = a, b) are turned on, there will be a junction that connects inductors L_1, L_2 and L_f. and voltage spikes will destroy the switches. In addition, if S_{1j}, S_{4j} (j = a, b) are turned off before S_{2j}, S_{3j} (j = a, b) are turned on, there will

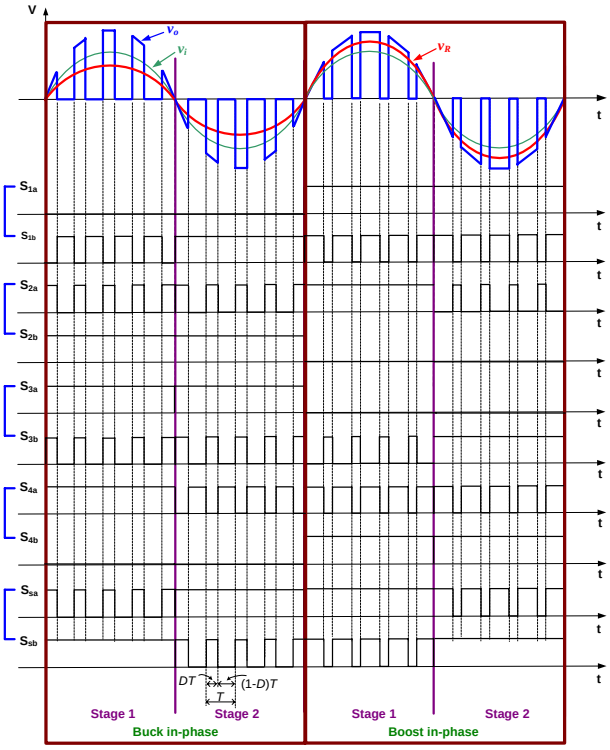

(a) Buck/boost in-phase operation.

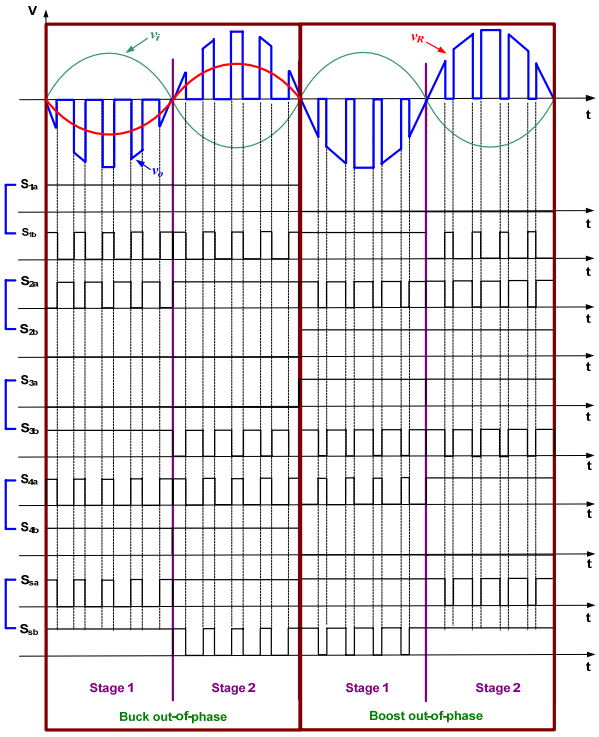

(b) Buck/boost out-of-phase operation.

Fig. 2. Switching pattern with switching safe-commutation strategy of the proposed converter.

be no path for the conduction of the current of the inductive load. As a result voltage spikes will be induced on the opened switches and will destroy the switches. In some previous methods, a lossy snubber circuit is added to each switch to limit voltage overshoot. Thus, Thisprovides commutation paths in dead time which results in inefficient and unreliable performance.

3.2 Operating Principles

For the proposed topologies, take the voltage-fed converter topology shown in Fig. 1(a) as an example. Fig. 2 illustrates the switching strategies for one cycle of input voltage of the proposed voltage-fed Z-source AC/AC converter. As shown in Fig. 2, D is an equivalent duty-ratio and T is a switching period. The operation of the proposed converter can be divided into two stages. Fig. 3 and Fig. 4 illustrate two stages in buck in-phase operation mode. Other operation regions such as boost in-phase, buck out-of-phase and boost out-of-phase are easily implemented by changing the switching strategy.

Stage 1: ($v_i(t) > 0$). The switches S_{sb}, S_{2b}, S_{3a}, and S_{4a} are fully turned on (S_{4a} turns on for commutation purpose, while S_{sb} and S_{2b} are turned on for continuous current flow); S_{sa}, S_{1b}, S_{2a} and S_{3b} are modulated complementary to dead time. In state 1, as shown in Fig. 3(a), S_{sa} and S_{2a} turn on and conduct the current flow during the positive cycle of input voltage; S_{3b} turns on and conducts negative current flow from load to source, if possible; S_{4a} turns on for commutation purpose. Then S_{2a} turns off and S_{1b} has not yet turned on and there are two commutation states that occur. If $i_f > 0$, the current flows along a path from S_{sa}, as shown in Fig. 3(b); if $i_f < 0$, the current flows along a path from S_{2b}, as shown in Fig. 3(c). In state 2, as shown in Fig. 3(d), S_{1b} turns on and conducts the current flow in the Z-source network as a shoot-through path; the positive load current may be freewheeled through S_{4a} and S_{3a}; the negative load current may be freewheeled through S_{1b} and S_{2b}. In these switching patterns, the current path is continuous regardless of current direction. Thus, the voltage spikes are eliminated during the switching and commutation processes.

Stage 2: ($v_i(t) < 0$). The switches S_{sa}, S_{1b}, S_{2b}, and S_{3a} are fully turned on (S_{1b} turns on for commutation purpose, while S_{sa} and S_{3a} are turned on for continuous current

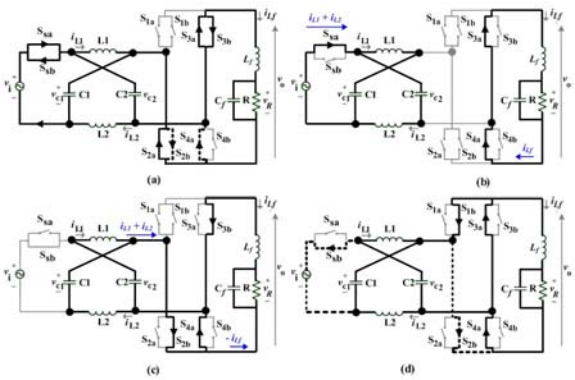

Fig. 3. Stage 1 of buck in-phase mode: (a) State 1; (b) Commutation state when $i_{Lf} > 0$; (c) Commutation state when $i_{Lf} < 0$; (d) State 2.

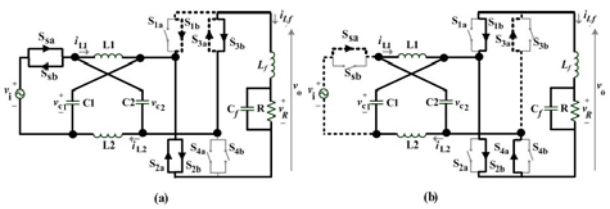

Fig. 4. Stage 2 of buck in-phase mode: (a) State 1; (b) State 2.

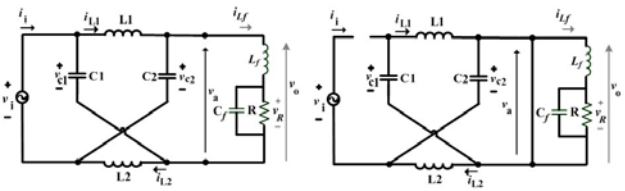

(a) (b)

Fig. 5. Equivalent circuits in one switching period of proposed single-phase Z-source AC/AC converter. (a) State 1: the time interval is DT. (b) State 2: the time interval is $(1\text{-}D)T$.

flow); S_{sb}, S_{2a}, S_{3b} and S_{4a} are modulated complementary to dead time. In state 1, as shown in Fig. 4(a), S_{sb} and S_{3b} turn on and conduct current flow during the negative cycle of input voltage; S_{2a} turns on and conducts positive current flow from load to source, if possible; S_{1b} turns on for commutation purpose. In state 2, as shown in Fig. 4(b), S_{4a} turns on and conducts the current flow in the Z-source network as a shoot-through path; the positive load current may be freewheeled through S_{4a}, S_{3a}; the negative load current may be freewheeled through S_{1b}, S_{2b}. The analysis of commutation states for stage 2 is similar to that for stage 1. The dotted lines in Fig. 3 and Fig. 4 indicate the safe-commutation switch during each particular stage. The operation of other regions is similar to that in buck in-phase operation region as analyzed above. Table 1 provides the switching sequences for the proposed converter.

4. Analysis of Proposed Converter

4.1 Circuit Analysis

As an example, the proposed voltage-fed Z-source AC/AC converter shown in Fig. 1(a) is analyzed. Because the inductors L_1, L_2 and capacitors C_1, C_2 of the Z-network have the same inductance (L) and capacitance (C), respectively, the Z-source network becomes symmetrical. Ignoring the effects of dead time, the converter has two operating states in one switching period: state 1 and state 2 as shown in Fig. 5. Then we have:

$$i_{L1} = i_{L2} = i_L \tag{1}$$

$$v_{C1} = v_{C2} = v_C. \tag{2}$$

In state 1 as shown in Fig. 5(a), the time interval is DT, where D is the equivalent duty-ratio; T is the switching period as shown in Fig. 2(a). We thus get:

$$\begin{cases} L\dfrac{di_L}{dt} = v_i - v_c \\ C\dfrac{dv_C}{dt} = i_L - i_{Lf}. \end{cases} \tag{3}$$

In state 2 as shown in Fig. 5(b), the time interval is $(1\text{-}D)T$. As a result, we get:

$$\begin{cases} L\dfrac{di_L}{dt} = v_c \\ C\dfrac{dv_C}{dt} = -i_L. \end{cases} \tag{4}$$

From (3) and (4), we get the averaged equation:

$$\begin{cases} L\dfrac{di_L}{dt} = D(v_i - v_c) + (1-D)\cdot v_c \\ C\dfrac{dv_C}{dt} = D(i_L - i_{Lf}) + (1-D)\cdot(-i_L). \end{cases} \tag{5}$$

In steady state, we get:

Table 1. Sequences of switching control for the proposed converter.

Region	Voltage gain	Stage	Switch "on" states				
			State 1		State 2		
			Active	Safe-commutation	Shoot-through	Free-wheeling	Safe-commutation
(I) Buck in-phase	$K=-\frac{D}{2D-1}$. $D<0.33$	1	S_{sa}, S_{sb}, S_{2a}, S_{3a}, S_{3b}	S_{2b}, S_{4a}	S_{1b}, S_{3a}	(S_{3a}, S_{4a}) or (S_{1b}, S_{2b})	S_{sb}, S_{2b}
		2	S_{sa}, S_{sb}, S_{2a}, S_{2b}, S_{3b}	S_{1b}, S_{3a}	S_{2b}, S_{4a}	(S_{1b}, S_{2b}) or (S_{3a}, S_{4a})	S_{sa}, S_{3a}
(II) Boost in-phase	$K=\frac{D}{2D-1}$. $D>0.5$	1	S_{sa}, S_{sb}, S_{1a}, S_{1b}, S_{4a}	S_{2a}, S_{4b}	S_{1a}, S_{3b}	(S_{1a}, S_{2a}) or (S_{3b}, S_{4b})	S_{sa}, S_{4b}
		2	S_{sa}, S_{sb}, S_{1b}, S_{4a}, S_{4b}	S_{1a}, S_{3b}	S_{2a}, S_{4b}	(S_{3b}, S_{4b}) or (S_{1a}, S_{2a})	S_{sb}, S_{1a}
(III) Buck out-of-phase	$K=\frac{D}{2D-1}$. $D<0.33$	1	S_{sa}, S_{sb}, S_{1b}, S_{4a}, S_{4b}	S_{1a}, S_{3b}	S_{2a}, S_{4b}	(S_{3b}, S_{4b}) or (S_{1a}, S_{2a})	S_{sb}, S_{1a}
		2	S_{sa}, S_{sb}, S_{1a}, S_{1b}, S_{4a}	S_{2a}, S_{4b}	S_{1a}, S_{3b}	(S_{1a}, S_{2a}) or (S_{3b}, S_{4b})	S_{sa}, S_{4b}
(IV) Boost out-of-phase	$K=-\frac{D}{2D-1}$. $D>0.5$	1	S_{sa}, S_{sb}, S_{2a}, S_{2b}, S_{3b}	S_{1b}, S_{3a}	S_{2b}, S_{4a}	(S_{1b}, S_{2b}) or (S_{3a}, S_{4a})	S_{sa}, S_{3a}
		2	S_{sa}, S_{sb}, S_{2a}, S_{3a}, S_{3b}	S_{2b}, S_{4a}	S_{1b}, S_{3a}	(S_{3a}, S_{4a}) or (S_{1b}, S_{2b})	S_{sb}, S_{2b}

$$\begin{cases} L\dfrac{di_L}{dt}=0 \\ C\dfrac{dv_C}{dt}=0. \end{cases} \tag{6}$$

Thus, we have:

$$\begin{cases} v_c=\dfrac{D}{2D-1}v_i \\ i_L=\dfrac{D}{2D-1}i_{Lf}. \end{cases} \tag{7}$$

Ignoring the effects of dead time and assuming that the inductor in the Z-network is very small and that there is no line frequency drop across the inductor, the AC voltage across the single-phase matrix converter, v_a, as shown in Fig. 1(a) should equal the voltage across the capacitor of the Z-network, that is:

$$v_a=v_c=\frac{D}{2D-1}v_i. \tag{8}$$

Fig. 6 shows a voltage gain across the single-phase matrix converter versus the duty cycle as presented in [1], [2]. There are two operation regions in a conventional single-phase Z-source AC/AC converter [1], [2]. When $D<0.5$, the converter operates in buck-boost out-of-phase mode. When $D>0.5$, the converter operates in boost in-phase mode.

As shown in Fig. 6, we can observe that the AC voltage across the single-phase matrix converter, v_a, can be bucked, and out-of-phase with the input voltage when $D<0.33$. In addition, the voltage across the single-phase matrix converter can be boosted, and in-phase with the input voltage when $D>0.5$. Based on a single-phase matrix converter topology which only modulates the phase angle of v_a (maintaining or reversing phase angle), the output voltage, v_o, can be easily controlled to be in-phase or out-of-phase with the voltage across the single-phase matrix converter. That means the output voltage can be controlled to be bucked and in-phase or out-of-phase with the input voltage when $D<0.33$. Thus, we have:

$$v_o=-v_a=-\frac{D}{2D-1}v_i;\ D<0.33: \text{and the input voltage and the output voltage are in-phase. Or:} \tag{9}$$

$$v_o=v_a=\frac{D}{2D-1}v_i;\ D<0.33: \text{and the input voltage and the output voltage are out-of-phase.} \tag{10}$$

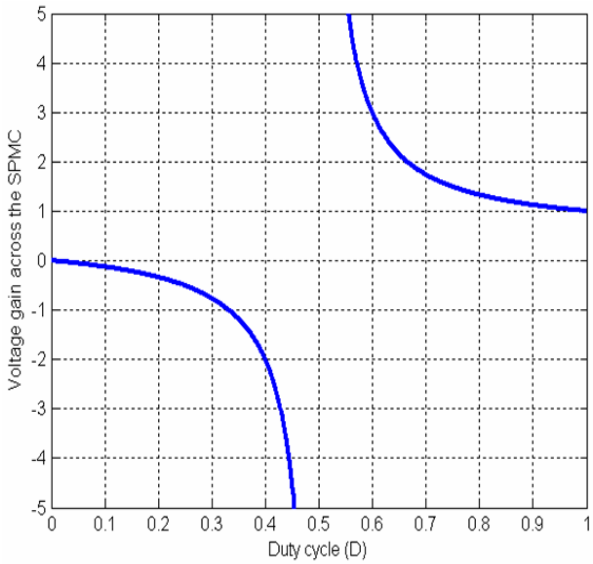

Fig. 6. Voltage gain (K) versus duty cycle (D) in [1], [2]. *SPMC*, single-phase matrix converter.

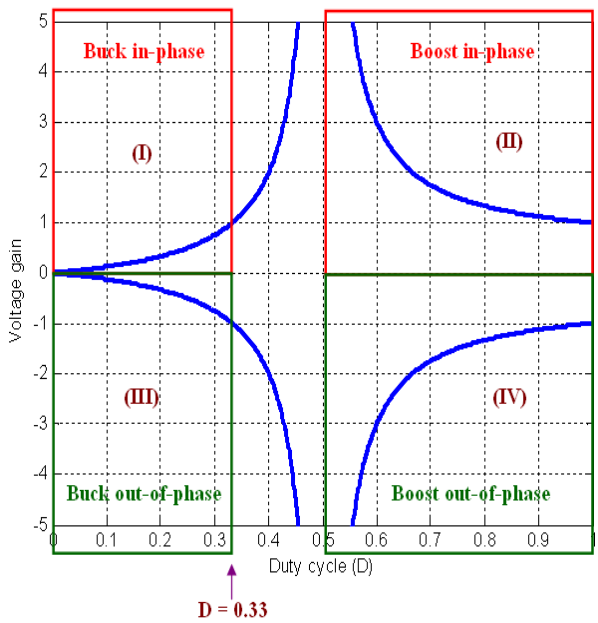

Fig. 7. Output voltage gain (K) versus duty cycle (D) of proposed converter.

Moreover, the output voltage can be controlled to be boosted and in-phase or out-of-phase with the input voltage when $D > 0.5$. Thus, we have:

$v_o = v_a = \frac{D}{2D-1} v_i$; $D > 0.5$: and the input voltage and the output voltage are in-phase. Or: (11)

$v_o = -v_a = -\frac{D}{2D-1} v_i$; $D > 0.5$: and the input voltage and the output voltage are out-of-phase. (12)

The output voltage gain (K) for the proposed single-phase Z-source AC/AC converter can be defined as:

$$K = \frac{v_o}{v_i} = \begin{cases} -\frac{D}{2D-1};\ D < 0.33: & \text{region (I).} \\ \frac{D}{2D-1};\ D > 0.5: & \text{region (II).} \\ \frac{D}{2D-1};\ D < 0.33: & \text{region (III).} \\ -\frac{D}{2D-1};\ D > 0.5: & \text{region (IV).} \end{cases} \quad (13)$$

Fig. 7 shows the output voltage gain, K, versus the duty cycle of the proposed single-phase Z-source AC/AC converter. As shown in Fig. 7, the proposed converter has four operating regions. When D is less than 0.33, the proposed converter can be bucked. In addition, the output voltage can be in-phase (region (I)) or out-of-phase (region (III)) with the input voltage. When D is greater than 0.5, the proposed converter can be boosted. In addition, the output voltage can be in-phase (region (II)) or out-of-phase (region (IV)) with the input voltage. When D = (0.33; 0.45), the proposed converter also operates in boost mode. In this area, however, the converter is very difficult to control because the operation region of D is too short. Therefore, it may be necessary to operate in regions (II) and (IV) for boost mode with a wider range of D. Note that the bucked-boosted output voltage is controlled by the duty cycle (D) while the phase angle of output voltage, in which the output voltage is in-phase or out-of-phase with the input voltage, is implemented by switching strategy. The operating regions of the proposed single-phase Z-source AC/AC converter are listed in Table 1.

4.2 Z-Network Parameter Design

The Z-network inductor parameters are chosen according to the current ripple, in state 1 as shown in Fig. 5(a). The inductor voltage is equal to the difference between input voltage and Z-network capacitor voltage. We get:

$$L = \frac{|v_i - v_C| DT}{\Delta i_L}. \tag{14}$$

If Δi_L is chosen as $\Delta i_L \le x\% I_L$, we have:

$$L \ge \frac{|v_{i,\max} - v_{C,\max}| DT}{x\% I_L} = \sqrt{2} V_i \left| \frac{D-1}{2D-1} \right| \frac{V_o DT}{x\% P_o}$$
$$= \frac{\sqrt{2} V_i^2 D^2 (1-D) T}{(2D-1)^2 x\% P_o}. \tag{15}$$

where P_o is output power; I_L, V_i, V_o are rms values of Z-network inductor current, input voltage and output voltage, respectively.

The Z-network capacitor parameters are chosen according to the voltage ripple, in state 2 as shown in Fig. 5(b). The capacitor current is equal to the Z-network inductor current. We get:

$$C = \frac{i_L (1-D) T}{\Delta v_C}. \tag{16}$$

If Δv_C is chosen as $\Delta v_C \le y\% V_C$, we have:

$$C \ge \frac{i_{L,\max}(1-D)T}{y\% V_C} = \frac{D}{2D-1} i_{Lf,\max} \frac{(1-D)T}{y\% V_o}$$
$$= \frac{\sqrt{2} P_o (1-D)(2D-1) T}{y\% D V_i^2}. \tag{17}$$

where V_C is the rms value of Z-network capacitor voltage.

5. Simulation Results

We provide PSIM simulation results in order to verify the properties described above for the proposed single-phase Z-source AC/AC converter. We selected the simulation parameters of the Z-source network and load to be $L_1 = L_2 = 1$ mH, $C_1 = C_2 = 6.8$ μF, $L_f = 3$ mH, $C_f = 10$ μF, $R = 55$ Ω as shown in Table 2. The voltage drop across switches (diodes) was set at 2V. The switching frequency was set to 20 kHz, and dead time for commutation at 0.5μs. The input voltage was 110 Vrms/60 Hz. Fig. 8 and Fig. 9 show the simulation results of the proposed converter with various operation regions. In Figs. 8-9, the top waveform is input voltage, v_i; the center waveform is Z-network capacitor C_1 voltage, v_{C1}; and the bottom waveform is output voltage, v_R. As shown in Fig. 8, the output voltage is bucked and in-phase with the input voltage (Fig. 8(a)) or 180° out-of-phase with the input voltage (Fig. 8(b)) when D = 0.3. Also when D = 0.7, the output voltage is boosted and in-phase with the input voltage (Fig. 9(a)) or 180° out-of-phase with the input voltage (Fig. 9(b)). If D = 0.3, the amplitude of output voltage, according to theoretical analysis, should be bucked to 117 Vpeak. As shown in Fig. 8, however, the amplitude of output voltage is 104 Vpeak. If D = 0.7, the amplitude of output voltage, according to theoretical analysis, should be boosted to 273 Vpeak. As shown in Fig. 9, however, the amplitude of output voltage is 255 Vpeak. The amplitude of output voltage in the simulation studies is lower than that in the theoretical analysis. The difference can be explained by the fact that in the circuit analysis we ignored the voltage drops across the switches (diode) and the effects of dead time.

Table 2. Simulation and experimental parameters.

Input voltage		110 Vrms
Z-network	$L_1 = L_2$	1 mH
	$C_1 = C_2$	6.8 μF
Switching frequency		20 kHz
Dead time for commutation		0.5 μs
Output filter	L_f	3 mH
	C_f	10 μF
Load (R)		55 Ω

6. Experimental Results

We constructed a laboratory prototype based on a TMS320F2812 DSP, as shown in Fig. 1(a). A block diagra m of the experimental system including a microcontroller TMS320F2812 DSP, an IGBT driver circuit and a single-phase Z-source buck-boost matrix converter power circuit is shown in Fig. 10. The AC input voltage is produced by an ES2000S single-phase master (NF Corporation). A voltage transducer such as a LEM LV25-P is connected across the input. This input voltage

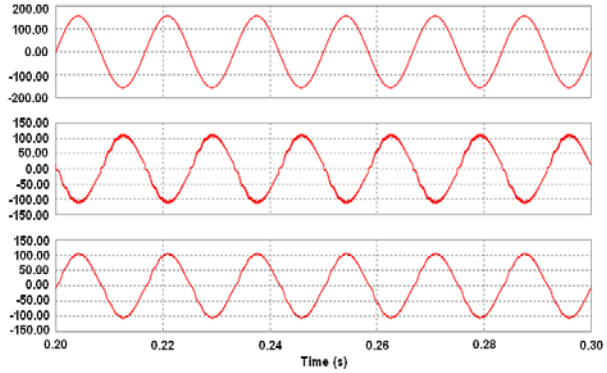

(a) Region (I) (buck in-phase)

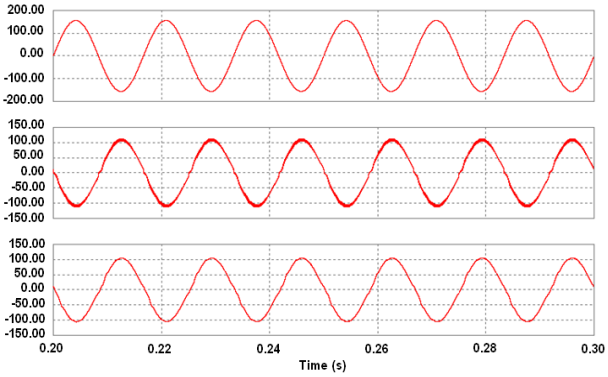

(b) Region (III) (buck out-of-phase)

Fig. 8. Simulation results based on R load for buck mode with V_i = 110 Vrms/60Hz, D = 0.3. (a) Region (I) (buck in-phase). (b) Region (III) (buck out-of-phase). Top: v_i; Center: v_{C1}; Bottom: v_R.

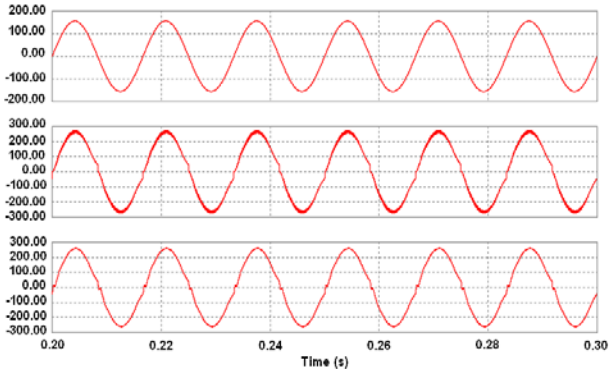

(a) Region (II) (boost in-phase)

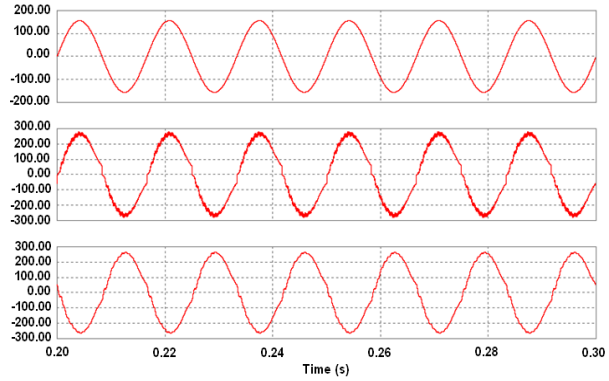

(b) Region (IV) (boost out-of-phase)

Fig. 9. Simulation results based on R load for boost mode with V_i = 110 Vrms/60Hz, D = 0.7. (a) Region (II) (boost in-phase). (b) Region (IV) (boost out-of-phase). Top: v_i; Center: v_{C1}; Bottom: v_R.

sensor signal is sent to the DSP via a 12-bit analog-to-digital (A/D) converter. An unsigned long-type 12 bit (0–4095) from the A/D converter is compared to 2048 to detect the zero crossing point of the input voltage. Depending on the desired operation region, the DSP generates ten control signals (four PWM signals to control four switches S_{1b}, S_{2a}, S_{3b}, S_{4a}, four I/O signals to control the four switches S_{1a}, S_{2b}, S_{3a}, S_{4b} in the single-phase matrix converter, and two PWM signals to control the source bidirectional switch S_{sj} [j = a, b], where a and b refer to drivers 1 and 2, respectively). All bidirectional switches are implemented with two FAIRCHILD G60N90D IGBTs connected oppositely as shown in Fig. 1. The parameters used in the experiment are the same as in the simulation. Table 2 provides a list of the parameters used in the simulation and the experiment.

Fig. 11 and Fig. 12 show the experimental results based on R load of the proposed converter with various operation

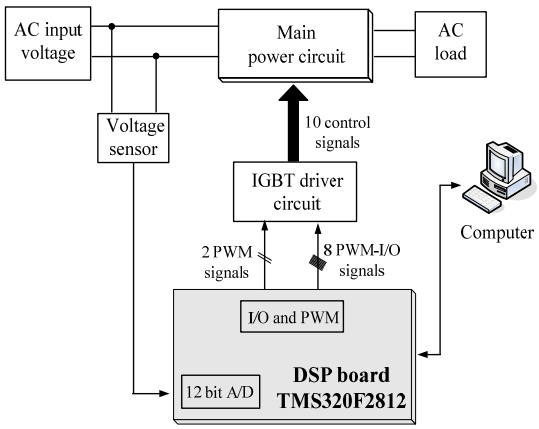

Fig. 10. Block diagram of experimental system.

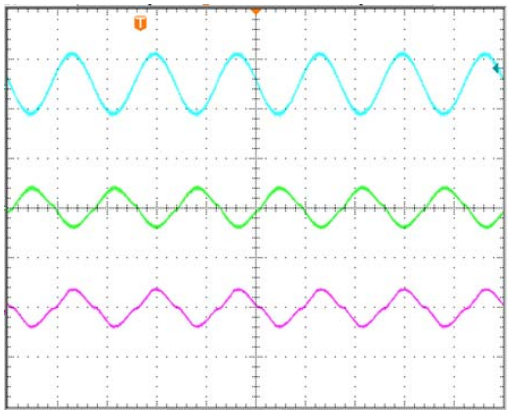

(a) Region (I) (buck in-phase)

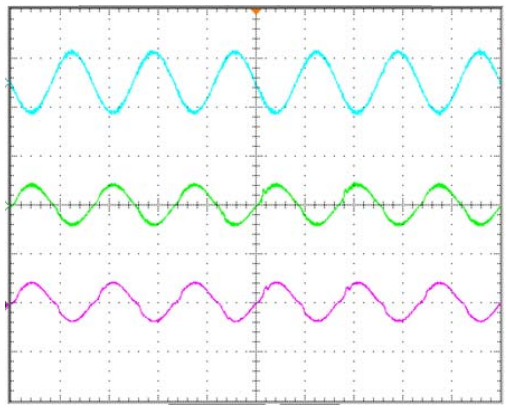

(c) Region (III) (buck out-of-phase)

Fig. 11. Experimental results based on R load for buck mode with V_i = 110 Vrms/60Hz, D = 0.3. (a) Region (I) (buck in-phase). (b) Region (III) (buck out-of-phase). Top: v_i; Center: v_{C1}; Bottom: v_R. (x-axis: 10ms/div., y-axis: 250V/div).

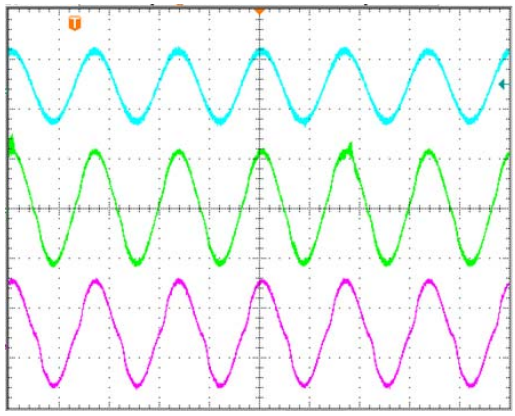

(a) Region (II) (boost in-phase)

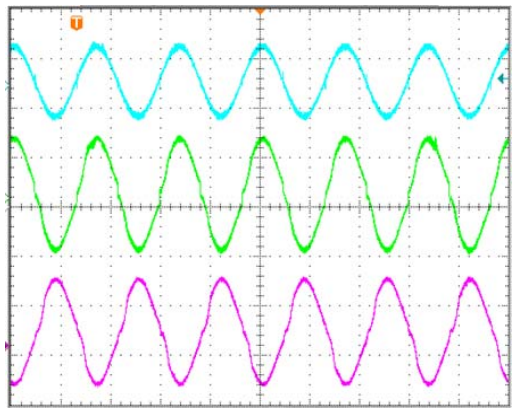

(b) Region (IV) (boost out-of-phase)

Fig. 12. Experimental results based on R load for boost mode with V_i = 110 Vrms/60Hz, D = 0.7. (a) Region (II) (boost in-phase). (b) Region (IV) (boost out-of-phase). Top: v_i; Center: v_{C1}; Bottom: v_R. (x-axis: 10ms/div., y-axis: 250V/div).

regions. Fig. 11 shows the input voltage (top), Z-network capacitor C_1 voltage (center) and output voltage (bottom) in buck mode when input voltage is 110 Vrms/60 Hz, D = 0.3. The output voltage is bucked to 72 Vrms from the 110 Vrms input voltage and in-phase with the input voltage as shown in Fig. 11(a) or 180° out-of-phase with the input voltage as shown in Fig. 11(b). Also, Fig. 12 shows the input voltage (top), Z-network capacitor C_1 voltage (center) and output voltage (bottom) in boost mode when input voltage is 110 Vrms/60 Hz, D = 0.7. The output voltage is boosted to 178 Vrms from the 110 Vrms input voltage and in-phase with the input voltage as shown in Fig. 12(a) or 180° out-of-phase with the input voltage as shown in Fig. 12(b). Fig. 13 shows the experimental results based on R-L load with R = 55 Ω, L = 23 mH for boost in-phase mode when V_i = 110 Vrms/60 Hz, D = 0.7. In Fig. 13, the waveforms from top to bottom are the input voltage, v_i, Z-network capacitor C_1 voltage, v_{C1}, output voltage, v_R, and output current, i_R.

From our simulation and our experimental results, we can see that the output voltage can be controlled to buck or boost the amplitude by duty cycle D. Furthermore, the output voltage can be in-phase or 180° out-of-phase with the input voltage depending on the switching strategies.

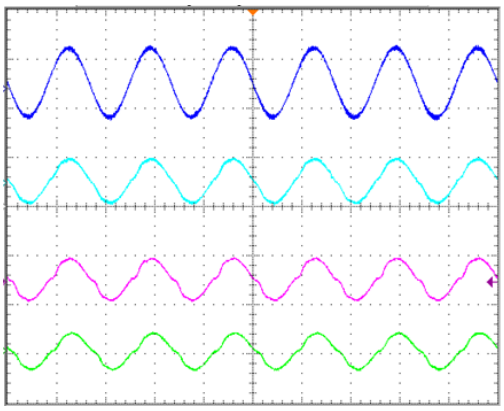

Fig. 13. Experimental results based on R-L load for boost in-phase mode with V_i = 110 Vrms/60Hz, D = 0.7. From top to bottom: v_i (250V/div.); v_{C1} (500V/div.); v_o (500V/div.); i_R (10A/div.). Time: 10ms/div.

7. Conclusions

In this paper we have presented a new type of single-phase Z-source AC/AC converter based on a single-phase matrix converter topology. The proposed topology provides a wider range output voltage operation in which the output voltage can be bucked-boosted and in-phase with the input voltage. Furthermore, the output voltage can be bucked-boosted and out-of-phase with the input voltage. In order to provide a continuous current path, the safe-commutation strategy is employed. Steady-state analysis, simulation and experimental results are illustrated. By duty-ratio control, the proposed converter acts like a "solid-state transformer" with a continuously variable turn ratio. The proposed converter can be used as a dynamic voltage restorer (DVR) to compensate voltage sags and swells in AC/AC line conditioning. The feature where the output voltage is bucked/boosted and in-phase with the input voltage is used for voltage sag compensation. The feature where the output voltage is bucked/boosted and out-of-phase with the input voltage is used for voltage swell compensation. Therefore, a DVR system which employs the proposed converter does not require any battery energy-storage devices.

Acknowledgment

This work was supported by a Grant from the Korean Ministry of Education, Science and Technology (The Regional Core Research Program/Biohousing Research Institute), and is in part the outcome of a manpower development program for Energy and Resource supported by the Ministry of Knowledge and Economy.

References

[1] X. P. Fang, Z. M. Qian and F. Z. Peng, "Single-phase Z-source PWM ac-ac converters," *IEEE Power Electronics Letters*, vol. 3, no. 4, pp. 121-124, 2005.

[2] Y. Tang, S. Xie and C. Zhang, "Z-Source ac-ac converters solving commutation problem," *IEEE Trans. Power Electron.*, vol. 22, no. 6, pp. 2146-2154, 2007.

[3] F. Z. Peng, L. Chen, and F. Zhang, "Simple topologies of PWM ac-ac converter," *IEEE Power Electronics Letters*, vol. 1, no. 1, pp. 10-13, 2003.

[4] J. H. Youm and B. H. Kwon, "Switching technique for current-controlled ac-to-ac converters," *IEEE Trans. Ind. Electron.*, vol. 46, no. 2, pp. 309-318, 1999.

[5] N. S. Choi, Y. Li, B. M. Han, E. C. Nho, and J. S. Ko, "Improvement of output linearity of matrix converter with a general R-C commutation circuit," *Journal of Power Electronics,* vol. 9, no. 2, pp.232-242, March 2009.

[6] M. K. Nguyen, Y. G. Jung, H. Y. Yang, and Y. C. Lim, "Single-phase Z-source cycloconverter (SPZC) with safe-commutation strategy," *IET Power Electron.*, accepted to be published.

[7] M. K. Nguyen, Y. G. Jung, and Y. C. Lim, "Single-phase Z-source buck-boost matrix converter," *in proc. of IEEE Applied Power Electronics Conference and Exposition, APEC'09*, pp. 846-850, 2009.

[8] P. W. Wheeler, J. Rodriguez, J. C. Clare, L. Empringham and A. Weinstein, "Matrix Converter: A Technology Review," *IEEE Trans. Ind. Electron.*, vol. 49, no. 2, pp. 276-2.

[9] H.H. Lee, H.M. Nguyen, and T.W. Chun, "Implementation of direct torque control method using matrix converter fed induction motor," *Journal of Power Electronics*, vol. 8, no. 1, pp.74-80, January 2008.

[10] H. H. Lee, and H. M. Nguyen, "A new study on indirect vector AC current control method using a matrix converter fed induction motor," *Journal of Power Electronics*, vol. 6, no. 1, pp.67-72, January 2006.

[11] K. You, and M. F. Rahman, "Analytical model of conduction and switching losses of matrix-Z-source converter," *Journal of Power Electronics*, vol. 9, no. 2, pp.275-287, March 2009.

[12] D. M. Lee, T. G. Habetler, R. G. Harley, T. L. Keister, and J. R. Rostron, "A voltage sag supporter utilizing a PWM-switched autotransformer," *IEEE Trans. Power Electron.*, vol. 22, no.2, pp.626-635, March 2007.

[13] T. Ahmed, O. Noro, S. Sato, and M. Nakaoka, "Static VAR compensator-based voltage regulation for variable-speed prime mover coupled single-phase self-excited induction generator," *Journal of Power Electronics*, vol. 3, no. 3, pp. 185-196, July 2003.

[14] A. Zuckerberger, D. Weinstock and A. Alexandrovitz, "Single-phase matrix converter," *IEE Proc. Electric Power App.*, vol. 144, no. 4, pp. 235-240, 1997.

[15] Z. Idris, M.K. Hamzah and M.F. Saidon, "Implementation of single-phase matrix converter as a direct ac-ac converter with commutation strategies," *in Conf. Rec. of IEEE PESC'06*, pp.2240-2246, 2006.
[16] A. K. Gola, and V. Agarwal, "Implementation of an efficient algorithm for a single phase matrix converter," *Journal of Power Electronics*, vol. 9, no. 2, pp.198-206, March 2009.

Minh-Khai Nguyen was born in Vietnam in 1982. He received a B.S. degree in electrical and electronics engineering from Hochiminh University of Technology, Ho Chi Minh city, Vietnam, in 2005, and a M.S. degree in electrical engineering from Chonnam National University, Korea, in 2007. He is currently working toward a Ph.D. in electrical engineering at Chonnam National University, Korea. His current research interests include switched reluctance motor drives, power quality and Z-source converters. He is also a member of the Korean Institute of Power Electronics.

Young-Gook Jung was born in Gwang-Ju, Korea, in 1963. He received his B.S., M.S. and Ph.D. in electrical engineering from Chonnam National University in 1982, 1986 and 1996, respectively. He is currently an Associate Professor in the Department of Electrical Engineering, Daebul University, Youngam-Geun, Chonnam, Korea. His research interests are Z-source converters and their applications, random PWM schemes, active power filters, power quality problems and solutions. Dr. Jung has received several Prize Paper Awards from the KIEE and KIPE of Korea.

Young-Cheol Lim was born in Chonnam, Korea, in 1953. He received a B.S. degree in electrical engineering from Chonnam National University in 1975. He received his M.S. and Ph.D. from Korea University in 1977 and 1990, respectively. He has been a professor of Chonnam National University since 1981. He was a Director of the Research Center for High-quality Electric Components and Systems in Chonnam National University from 1998 to 2007. His research interests are power electronics, control instruments and neuro-fuzzy control. He is the coauthor of three books and has authored more than 200 published technical papers. He has been the president of KIPE in 2009. He has been active in various academic societies, such as the Korean Institute of Power Electronics, the Korean Institute of Electrical Engineers, and the Institute of Control, Automation and Systems Engineers, Korea. He is a Member of IEEE. He has received a number of awards, including the 1997 KIEE Best Paper Award, 1998 KIEE Meritorious Award, 2000 KIPE Best Paper Award, and 2001 KIPE Academic Award.