2009년도 대한전기학회 하계학술대회 논문집 2009. 7. 14 - 17

주파수 안정도 유지를 위한 부하차단 시뮬레이션-가스분리플랜트 사례

김봉희
명지전문대학

LOAD SHEDDING SIMULATION FOR MAINTAINING FREQUENCY STABILITY-GAS SEPARATION PLANT CASE

BONG-HEE KIM
MYONGJI COLLEGE

Abstract - The industrial power system has the radial plant distribution system and domestic generators to supply the essential loads. When the system is isolated from the utility tie line, the system frequency drops resulting in the trip of generators. The load shedding scheme shall be properly designed to secure the essential load. In this paper two kinds of load shedding schemes, those are, the Fast Act Load Shedding(FALS) and Under Frequency Load Shedding(UFLS) are simulated and compared taking an example of petrochemical gas separation plant.

1. INTRODUCTION

The industrial power systems have usually domestic generators and import some amount of power through a utility tie line. Mayor loads are induction motors in the systems. If the utility ties are lost, the power deficiency in the industrial systems will cause frequency decline, which can be restored by load shedding with both a frequency threshold and a proper time setting, which necessitates so called, load shedding block and timing studies. This load shedding relies on frequency variation based on frequency stability and has been so far adopted in the utility and industrial system. The frequency stability is concerned with the following swing equation.

$$\frac{d(-\Delta f)}{dt} = \frac{1}{2H}(\Delta P - D\Delta f) \quad (1)$$

$$\frac{d\delta}{dt} = \Delta f \quad (2)$$

where ΔP is over-load in per unit, Δf is frequency deviation in per unit, D is load damping, and H is inertia constant, δ is rotor angle.[1]

This paper presents a dynamic simulation on pattern of frequency drop and restoration by different load shedding schemes for an overseas case of a petrochemical gas separation plant .[2],[3]

2. MODELLING AND SIMULATION

2.1 SYSTEM MODELLING

2.1.1 Electrical system configuration

The electrical system configuration for the simulation comprises of PEA' s 115kV, 33kV, 11kV, and 0.4kV systems of the petrochemical and gas separation plant in Thailand, which is interconnected to 115kV 50Hz utility supply as shown on the figure 1.

2.1.2 Generator and excitation system

The synchronous machine model – type1 is used for modelling of generator. The excitation system of the generator is a brushless type. The rotating rectifier systems, IEEE type AC2 is used to represent the excitation system.

2.1.3 Prime mover of generator

The Rolls Royce RT62 gas turbine is used as the prime mover of the 4 generators in the plant. The model of IEEE Gas Turbine (SGT) is used to represent the gas turbine block diagram.

2.1.4 Load model

The loads in the plant are composed of induction motors, synchronous motors, and static loads. The Synchronous machine model - Type 1 is used for the modeling of synchronous motor. The 11kV and 6.6kV induction motors are individually represented by a circuit model. The 380V loads are lumped for each load bus and represented as both a motor and a static load. The purpose of dynamic modeling of induction motor is to examine the dynamic behavior of motor looking at the variation of voltage, current, torque, and speed during the transient period. The load of induction motor is mainly pump or compressor. The polynomial model is taken to consider the torque variation per speed variation.

$$\%T = A_0 + A_1\omega + A_2\omega^2 + A_3\omega^3 .$$

Where ω is speed in percent.

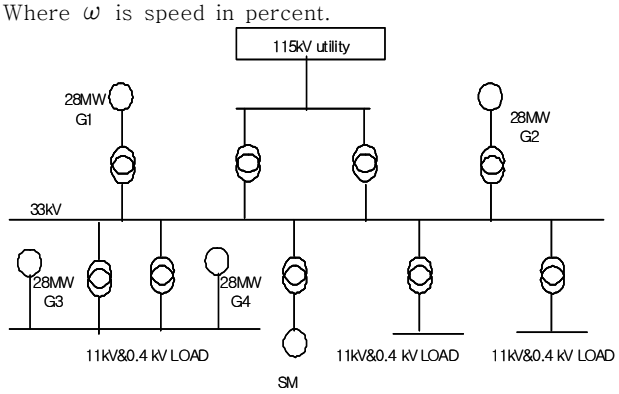

<Fig1.> Simplified Single Line Diagram

2.2 SIMULATION RESULT

2.2.1 Frequency drop pattern

There are two cases of utility supply outage. Case 1 is the outage of 115kV utility supply to which 4 generators are inter-connected. Case 2 is the outage of 33kV supply, to which 2 generators are connected. The amount of frequency drop and its trend versus time have been calculated to make clear whether the frequency reaches the 48Hz, at which frequency load shedding is activated with a proper time delay.

The frequency drop pattern is as shown in the figure 1. The voltage instability can happen when the generator is over-loaded excessively after the plant power system is isolated from the utility grid. This voltage instability prevents frequency drop and results in failure of pick-up of under frequency relay which makes available under frequency load shedding. (See case 1-4 for dynamic simulation.) The prime target of "Load shedding block and timing study" is to find out that the frequency relay load shedding can be made available without voltage instability happening. If the voltage collapse happens, the frequency relay can not rescue the power system and the total plant will become black-out.[4]

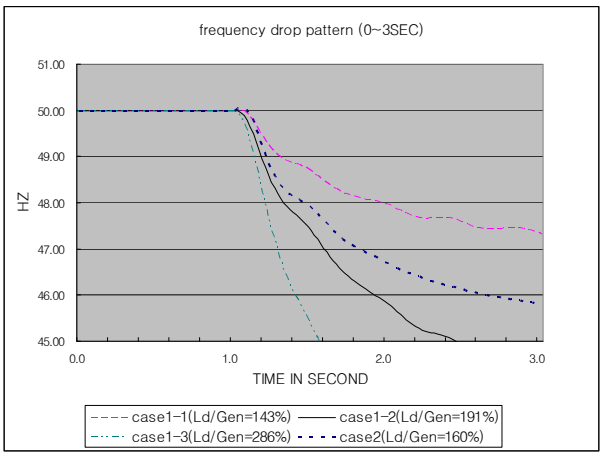

<Fig 2.> Frequency drop pattern without load shedding

<Table 1> Outage cases for frequency drop pattern simulation

outage case	generation	load	load/gen, %
115kV 1-1	4x25MW	143MW	143
115kV 1-2	3x25MW	143MW	191
115kV 1-3	2x25MW	143MW	286
115kV 1-4	1x25MW	143MW	572
33kV 2	1x25MW	40MW	160

2.2.2 Dynamic simulation on load shedding

Two kinds of load shedding schemes are simulated. One is the Fast Act Load Shedding(FALS). The other is Under Frequency Load Shedding(UFLS). The signal delay time considered for FALS is 220ms. The proposed setting of under frequency relay is 48Hz and timers settings are step1 0.2 seconds delay (UFLS-1), step2 0.4 seconds (UFLS-2), step3 0.6 seconds (UFLS-3), step4 0.8 seconds(UFLS-4).

<Table 2> Outage cases for load shedding simulation

outage case	generation	load	LS case	LS case
115kV 1-1	4x25MW	143MW	FALS-1	UFLS1-1
115kV 1-2	3x25MW	143MW	FALS-2	UFLS1-2
115kV 1-3	2x25MW	143MW	FALS-3	UFLS1-3
115kV 1-4	1x25MW	143MW	FALS-4	voltage instability
33kV 2	1x25MW	40MW	FALS-2	UFLS1-2

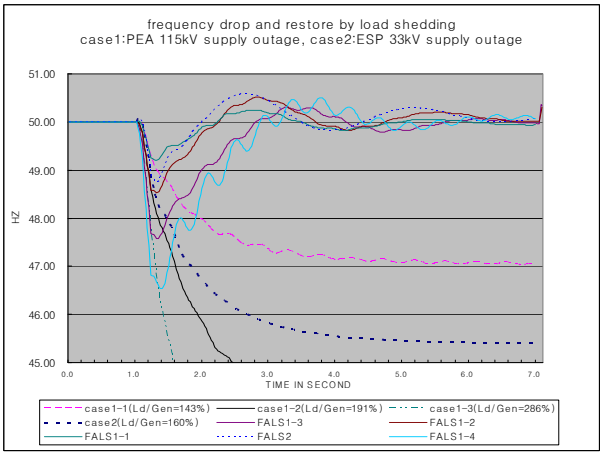

<Fig 3.> Frequency drop and restoration by fast act load shedding(FALS)

The lowest frequencies after the fast act load shedding are; respectively Case FALS1-1 : 49.20Hz, Case FALS1-2 : 48.53Hz, Case FALS1-3 :47.58Hz, Case FALS1-4 :46.53Hz, Case FALS-2 :48.74Hz.

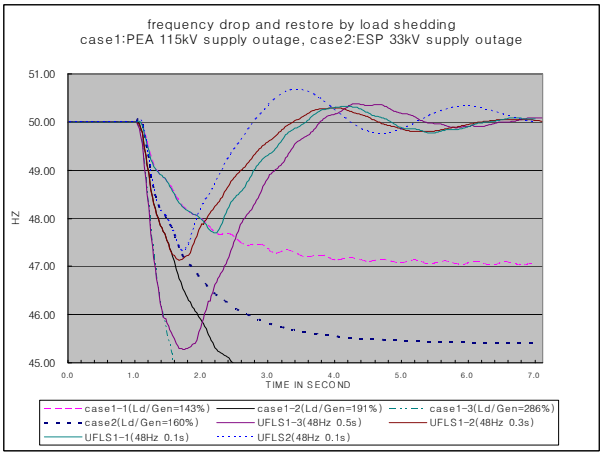

<Fig 4.> Frequency drop and restoration by under frequency load shedding(UFLS)

The lowest frequencies after the fast act load shedding are; respectively Case UFLS1-1 : 47.70Hz, Case UFLS1-2 :47.14Hz, Case UFLS1-3 :45.28Hz, Case FALS-2 :47.32Hz.

3. CONCLUSION

In this paper the dynamic simulation has been performed to calculate the frequency drop pattern versus time in the case that the generators in the petrochemical gas separation plant are isolated from the utility grid system. Two kinds of load shedding schemes, those are, the Fast Act Load Shedding(FALS) and Under Frequency Load Shedding(UFLS) are simulated and compared.

The fact acting load shedding can secure the frequency of generator into an acceptable range without happening of voltage instability. However the under frequency load shedding scheme with a time delay causes the lower system frequency than the fast acting load shedding. In case of heavy overload, the under frequency load shedding can not secure the system frequency due to happening of voltage instability.

[참 고 문 헌]

[1] Kundur, P., " Power System Stability and Control, Chapter 11 Control of Active Power and Reactive Power", McGraw-Hill, pp. 581 - pp. 626, 1994.

[2] Kim, Bong-Hee, "Transient and Frequency Stability Study for ESP and the 6th Gas Separation Plant ", Report by Myongji College prepared for SECL Korea and PTT Tailand, Jan., 2009.

[3] Kim, Bong-Hee, "Load Shedding Blocks and Timing Studies for ESP and the 6 th Gas Separation Plant ", Report by Myongji College prepared for SECL Korea and PTT Tailand, Jan., 2009.

[4] 김봉희, “산업용 전력계통의 주파수 안정도와 전압안정도를 고려한 부하차단 설계”, 대한전기학회 논문지, 53P-3-1, p103, 2004.